GT Series through bore Slip Rings

GT series through bore slip ring is mainly used for transmitting all kinds of signal and power circuits with a through bore, designed for through bore hydraulic or pneumatic rotating shaft installation.

Features

- Uses fiber brush technology which offers several advantages over conventional slip ring contacts including multiple points of contact per brush bundle
- Bore size from 12.7 to 210mm
- Standard, off-the-shelf
- Gold plated ring and Gold alloy brush
- Support power,signals transmitting
- Rings combination is available

GT Series Models

Model#	ID (mm)	OD (mm)	Circuits (Rings)
GT0729	7	29	1~12
GT1235	12.7	35	1~24
GT2045	20	45	1~24
GT1256	12.7	56	1~48
GT1256F	12.7	56	1~48
GT2069	20	69	1~48
GT2069F	20	69	1~48
GT2586	25.4	86	1~72
GT2586F	25.4	86	1~72
GT3099	30	99	1~72
GT3099F	30	99	1~72

Model#	ID (mm)	OD (mm)	Circuits (Rings)
GT3899	38.1	99	1~72
GT3899F	38.1	99	1~72
GT50119	50	119	1~96
GT50119F	50	119	1~96
GT50130	50	130	1~144
GT60130	60	130	1~144
GT70158	70	158	1~108
GT80158	80	158	1~108
GT90185	90	185	1~108
GT100185	100	185	1~108

60% of MOFLON's sales are customized solutions, please contact customer service for special requirements.

GT0729 Series

GT0729 series provides a 7mm through-bore for routing of hydraulic or pneumatic lines or hydraulic or pneumatic rotating shaft installation, and a compact 29mm outside diameter,features long life, fiber brush contact technology for ultimate performance in manychallenging applications.
GT0729 series are standard, off-the-shelf products, Color-coded lead wires are used onboth the stator and rotor for simplified electrical connections.It can transmit signal(2A), 5A current when 360° degree free rotating.

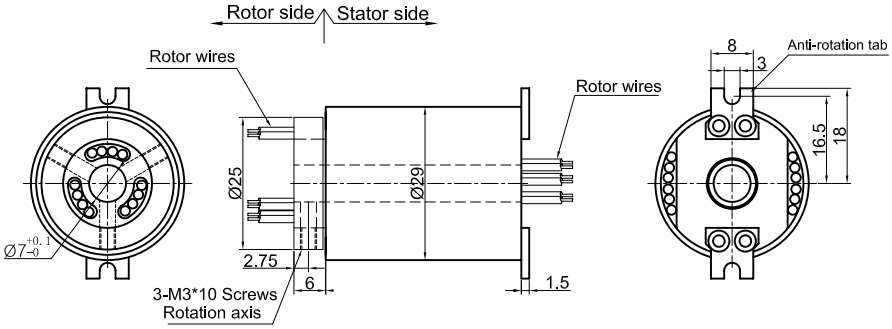

Part# Explanation

GT 0729 - S 06

- GT:through bore slip ring
- 0729:07-ID 7mm;29-OD29mm
- S:signal(2A)
- 06:6 rings

Part# List

GT0729 Series Parts# List			
Part#	10A	Signal or 5A	Length-L (mm)
GT0729-S02	0	2	37
GT0729-P0210	2	0	37
GT0729-S03	0	3	37
GT0729-P0310	3	0	37
GT0729-S04	0	4	37
GT0729-P0410	4	0	37
GT0729-S06	0	6	37
GT0729-P0210-S04	2	4	37
GT0729-P0410-S02	4	2	37
GT0729-P0610	6	0	56.8
GT0729-S12	0	12	56.8
GT0729-P0210-S10	2	10	56.8
GT0729-P0310-S09	3	9	56.8
GT0729-P0410-S08	4	8	56.8
GT0729-P0610-S06	6	6	56.8
GT0729-P0810-S04	8	4	56.8
GT0729-P1010-S02	10	2	56.8
GT0729-P1210	12	0	56.8

Note:N channels 5A rings parallel can be used as 1 channel N*5A current. For example: 2 rings 5A parallel could be used as 1 wires 10A

Specifications

Electrical Data		
Parameter	Value	
	Power	Signal
Rated Voltage	0~440VAC/VDC	0~440VAC/VDC
Insulation Resistance	≥600MΩ/500VDC	≥1000MΩ/500VDC
Lead Wires	AWG22#Teflon	AWG22#Teflon
Lead Length	Standard 300mm(adjustable)	
Insulation Strength	500VAC@50Hz , 60s	
Electrical Noise	<0.01Ω	
Mechanical Data		
Parameter	Value	
Working Life	100 Million Revs	
Rotating Speed	ID<60mm,1800RPM	
	60mm<ID<120mm,1200RPM	
	ID>120mm,800RPM	
Working Temperature	-30℃~80℃	
Operating Humidity	0~85% RH	
Contact Material	Precious Metal	
Housing Material	Aluminium Alloy	
Torque	0.05N.m;+0.02N.m/6 rings	
Protection Grade	IP51	

Lead Wires Color Code

Ring	1	2	3	4	5	6	7	8	9	10	11	12
Color	BLK	RED	YEL	GRN	BLU	WHT	BLK	RED	YEL	GRN	BLU	WHT

(6 wires for 1 group color, from 7-12, repeat the same color as 1...6, indicated with number code pipe)

GT1235 Series

GT1235 series provides a 12.7mm through-bore for routing of hydraulic or pneumatic lines or hydraulic or pneumatic rotating shaft installation, and a compact 35mm outside diameter,features long life, fiber brush contact technology for ultimate performance in manychallenging applications.
GT1233 series are standard, off-the-shelf products, Color-coded lead wires are used onboth the stator and rotor for simplified electrical connections.It can transmit signal(2A), 5A current when 360° degree free rotating.

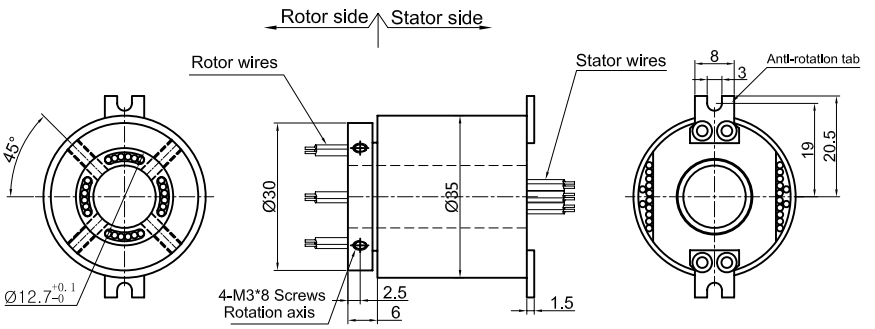

Part# Explanation

GT 1235 - S 06

- GT:through bore slip ring
- 1235:12-ID 12.7mm;35-OD 35mm
- S:signal(5A)
- 06:6 rings

Part# List

GT1235 Series Parts# List		
Part#	Signal or 5A	Length-L (mm)
GT1235-S02	2	30.4
GT1235-S03	3	30.4
GT1235-S04	4	30.4
GT1235-S06	6	30.4
GT1235-S08	8	44.2
GT1235-S10	10	44.2
GT1235-S12	12	44.2
GT1235-S14	14	58
GT1235-S16	16	58
GT1235-S18	18	58
GT1235-S20	20	71.8
GT1235-S22	22	71.8
GT1235-S24	24	71.8

Note:N channels 5A rings parallel can be used as 1 channel N*5A current. For example: 2 rings 5A parallel could be used as 1 wires 10A If each circuit need to pass current over 5A, please contact customer service for more details.

Specifications

Electrical Data		
Parameter	Value	
	Power	Signal
Rated Voltage	0~240VAC/VDC	0~240VAC/VDC
Insulation Resistance	≥500MΩ/500VDC	≥500MΩ/500VDC
Lead Wires	AWG22Teflon	AWG22#Teflon
Lead Length	Standard 300mm(adjustable)	
Insulation Strength	500VAC@50Hz , 60s	
Electrical Noise	<0.01Ω	

Mechanical Data	
Parameter	Value
Working Life	100 Million Revs
Rotating Speed	1~1800RPM
Working Temperature	-30℃~80℃
Operating Humidity	0~85% RH
Contact Material	Precious Metal
Housing Material	Aluminium Alloy
Torque	0.1N.m;+0.03N.m/6 rings
Protection Grade	IP51

Lead Wires Color Code

Ring	1	2	3	4	5	6	7	8	9	10	11	12
Color	BLK	RED	YEL	GRN	BLU	WHT	BLK	RED	YEL	GRN	BLU	WHT

(6 wires for 1 group color, from 7-12, repeat the same color as 1...6, indicated with number code pipe)

GT2045 Series

GT2045 series provides a 20mm through-bore for routing of hydraulic or pneumatic lines or hydraulic or pneumatic rotating shaft installation, and a compact 45mm outside diameter,features long life, fiber brush contact technology for ultimate performance in manychallenging applications.
GT2042 series are standard, off-the-shelf products, Color-coded lead wires are used onboth the stator and rotor for simplified electrical connections.It can transmit signal(2A), 5A current when 360° degree free rotating.

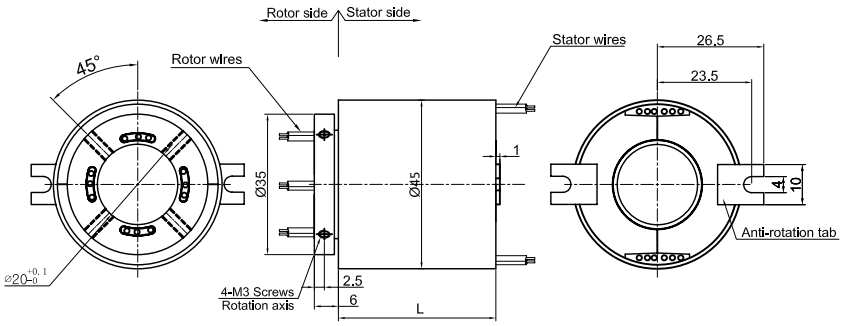

Part# Explanation

GT 2045 - S 06

- GT:through bore slip ring
- 2045:20-ID 20mm;45-OD 45mm
- 06:6 rings
- S:signal(5A)

Part# List

GT2045 Series Parts# List		
Part#	Signal or 5A	Length-L (mm)
GT2045-S02	2	30.4
GT2045-S03	3	30.4
GT2045-S04	4	30.4
GT2045-S06	6	30.4
GT2045-S08	8	44.2
GT2045-S10	10	44.2
GT2045-S12	12	44.2
GT2045-S14	14	58
GT2045-S16	16	58
GT2045-S18	18	58
GT2045-S20	20	71.8
GT2045-S22	22	71.8
GT2045-S24	24	71.8

Note:N channels 5A rings parallel can be used as 1 channel N*5A current. For example: 2 rings 5A parallel could be used as 1 wires 10A If each circuit need to pass current over 5A, please contact customer service for more details.

Specifications

Electrical Data		
Parameter	Value	
	Power	Signal
Rated Voltage	0~240VAC/VDC	0~240VAC/VDC
Insulation Resistance	≥500MΩ/500VDC	≥500MΩ/500VDC
Lead Wires	AWG22Teflon	AWG22#Teflon
Lead Length	Standard 300mm(adjustable)	
Insulation Strength	500VAC@50Hz , 60s	
Electrical Noise	<0.01Ω	
Mechanical Data		
Parameter	Value	
Working Life	100 Million Revs	
Rotating Speed	1~1800RPM	
Working Temperature	-30℃~80℃	
Operating Humidity	0~85% RH	
Contact Material	Precious Metal	
Housing Material	Aluminium Alloy	
Torque	0.1N.m;+0.03N.m/6 rings	
Protection Grade	IP51	

Lead Wires Color Code

Ring	1	2	3	4	5	6	7	8	9	10	11	12
Color	BLK	RED	YEL	GRN	BLU	WHT	BLK	RED	YEL	GRN	BLU	WHT

(6 wires for 1 group color, from 7-12, repeat the same color as 1...6, indicated with number code pipe)

GT1256 Series

GT1256 series provides a 12.7mm through-bore for routing of hydraulic or pneumatic lines or hydraulic or pneumatic rotating shaft installation, and a compact 56mm outside diameter,features long life, fiber brush contact technology for ultimate performance in manychallenging applications.
GT1256 series are standard, off-the-shelf products, Color-coded lead wires are used onboth the stator and rotor for simplified electrical connections.It can transmit signal(2A), 10A, multiple 10A current when 360° degree free rotating.

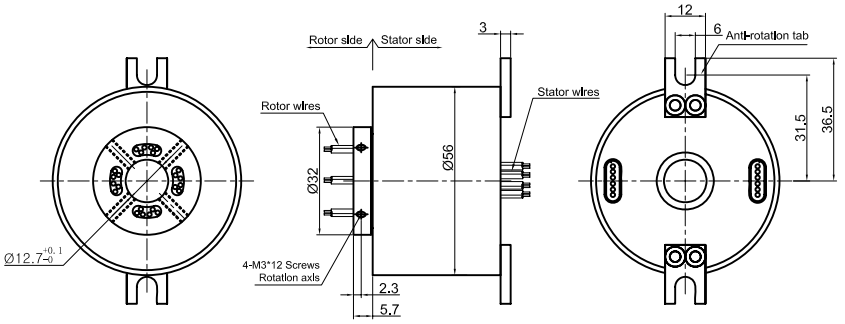

Part# Explanation

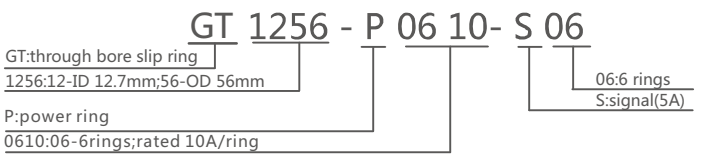

Part# List

GT1256 Series Parts# List							
Part#	10A	Signal or 5A	Length-L (mm)	Part#	10A	Signal or 5A	Length-L (mm)
GT1256-S02	0	2	34.6	GT1256-P1010-S08	10	8	79.4
GT1256-P0210	2	0	34.6	GT1256-P1210-S06	12	6	79.4
GT1256-S03	0	3	37.4	GT1256-P1410-S04	14	4	79.4
GT1256-P0310	3	0	37.4	GT1256-P1610-S02	16	2	79.4
GT1256-S06	0	6	45.8	GT1256-P1810	18	0	79.4
GT1256-P0210-S04	2	4	45.8	GT1256-S24	0	24	96.2
GT1256-P0410-S02	4	2	45.8	GT1256-P0410-S20	4	20	96.2
GT1256-P0610	6	0	45.8	GT1256-P0610-S18	6	18	96.2
GT1256-S12	0	12	62.6	GT1256-P1210-S12	12	12	96.2
GT1256-P0210-S10	2	10	62.6	GT1256-P1810-S06	18	6	96.2
GT1256-P0310-S09	3	9	62.6	GT1256-S30	0	30	113
GT1256-P0610-S06	6	6	62.6	GT1256-P0210-S28	2	28	113
GT1256-P0810-S04	8	4	62.6	GT1256-P0410-S26	4	26	113
GT1256-P1010-S02	10	2	62.6	GT1256-P0610-S24	6	24	113
GT1256-P1210	12	0	62.6	GT1256-S36	0	36	132.8
GT1256-S18	0	18	79.4	GT1256-P0410-S32	4	32	132.8
GT1256-P0210-S16	2	16	79.4	GT1256-P0610-S30	6	30	132.8
GT1256-P0410-S14	4	14	79.4	GT1256-S42	0	42	149.6
GT1256-P0610-S12	6	12	79.4	GT1256-P0410-S38	4	38	149.6
GT1256-P0810-S10	8	10	79.4	GT1256-S48	0	48	166.4

Note: N channels 10A rings parallel can be used as 1 channel N*10A current. For example: 2 rings 10A parallel could be used as 1 wires 20A. 10A,5A (signal) can combine freely in any way.It can be customized based on standard slip ring,please contact customer service for more detmails.

Specifications

Electrical Data		
Parameter	Value	
	Power	Signal
Rated Voltage	0~440VAC/VDC	0~440VAC/VDC
Insulation Resistance	≥1000MΩ/500VDC	≥1000MΩ/500VDC
Lead Wires	AWG16#Teflon	AWG22#Teflon
Lead Length	Standard 300mm(adjustable)	
Insulation Strength	800VAC@50Hz , 60s	
Electrical Noise	<0.01Ω	
Mechanical Data		
Parameter	Value	
Working Life	100 Million Revs	
Rotating Speed	ID<60mm,1800RPM	
	60mm<ID<120mm,1200RPM	
	ID>120mm,800RPM	
Working Temperature	-30℃~80℃	
Operating Humidity	0~85% RH	
Contact Material	Precious Metal	
Housing Material	Aluminium Alloy	
Torque	0.1N.m ; +0.03N.m/6rings	
Protection Grade	IP51	

Lead Wires Color Code

Ring	1	2	3	4	5	6	7	8	9	10	11	12
Color	BLK	RED	YEL	GRN	BLU	WHT	BLK	RED	YEL	GRN	BLU	WHT

(6 wires for 1 group color, from 7-12, repeat the same color as 1...6, indicated with number code pipe)

Options For Custom Slip Ring

Note: Below special demands can be customized. According, the delivery date will be extended 3 to 15 days; also the cost will be increased 30% to 50%. Most of our basic parts are standard and modular, which can save the cost and lead time.

① Cable exit way and cable length can be customized for both rotor and stator.
② Because of the structure limitation, length/height/OD can be customized on your request.
③ Support current or signal up to 200 rings.
④ Aviation plug, terminal and heat-shrink tube are optional.
⑤ Hybrid slip ring for Yaskawa/Panasonic/Siemens servo control signal, power line and encoder line.
⑥ Support mixed high speed data transmission (including Ethernet, USB, RS232, RS485, Profibus, CanBUS, CANOPEN, DeviceNET, CC-LINK, ProfiNET, EtherCAT, etc.)
⑦ Can combine temperature control signal with thermocouple signal.
⑧ Special environment can be customized, such as quakeproof, high temperature, etc.
⑨ Hybrid Pneumatic/hydraulic and electric slip ring can be mixed.
⑩ High temperature can up to 500 degrees.
⑪ High pressure can up to 110KV
⑫ Rotating speed can up to 10000RPM
⑬ Maximum current can up to 5000 amperes.
⑭ Military grade
⑮ Optional for underwater IP65, IP68.
⑯ Optional for stainless steel housing

Technical support: technical@moflon.com

GT1256F Series

GT1256F series provides a 12.7mm through-bore for routing of hydraulic or pneumatic lines or hydraulic or pneumatic rotating shaft installation, and a compact 56mm outside diameter,features long life, fiber brush contact technology for ultimate performance in manychallenging applications.
GT1256F series are standard, off-the-shelf products, Color-coded lead wires are used onboth the stator and rotor for simplified electrical connections.It can transmit signal(2A), 10A, multiple 10A current when 360° degree free rotating.

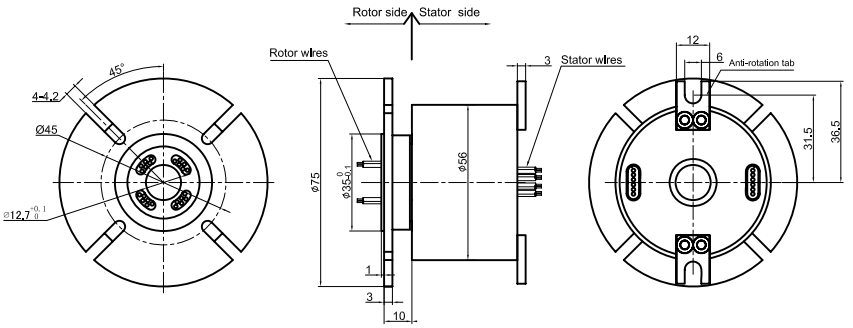

Part# Explanation

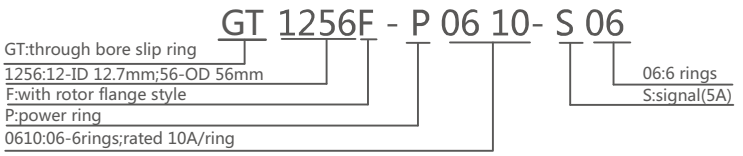

Part# List

GT1256F Series Parts# List							
Part#	10A	Signal or 5A	Length-L (mm)	Part#	10A	Signal or 5A	Length-L (mm)
GT1256F-S02	0	2	34.6	GT1256F-P1010-S08	10	8	79.4
GT1256F-P0210	2	0	34.6	GT1256F-P1210-S06	12	6	79.4
GT1256F-S03	0	3	37.4	GT1256F-P1410-S04	14	4	79.4
GT1256F-P0310	3	0	37.4	GT1256F-P1610-S02	16	2	79.4
GT1256F-S06	0	6	45.8	GT1256F-P1810	18	0	79.4
GT1256F-P0210-S04	2	4	45.8	GT1256F-S24	0	24	96.2
GT1256F-P0410-S02	4	2	45.8	GT1256F-P0410-S20	4	20	96.2
GT1256F-P0610	6	0	45.8	GT1256F-P0610-S18	6	18	96.2
GT1256F-S12	0	12	62.6	GT1256F-P1210-S12	12	12	96.2
GT1256F-P0210-S10	2	10	62.6	GT1256F-P1810-S06	18	6	96.2
GT1256F-P0310-S09	3	9	62.6	GT1256F-S30	0	30	113
GT1256F-P0610-S06	6	6	62.6	GT1256F-P0210-S28	2	28	113
GT1256F-P0810-S04	8	4	62.6	GT1256F-P0410-S26	4	26	113
GT1256F-P1010-S02	10	2	62.6	GT1256F-P0610-S24	6	24	113
GT1256F-P1210	12	0	62.6	GT1256F-S36	0	36	132.8
GT1256F-S18	0	18	79.4	GT1256F-P0410-S32	4	32	132.8
GT1256F-P0210-S16	2	16	79.4	GT1256F-P0610-S30	6	30	132.8
GT1256F-P0410-S14	4	14	79.4	GT1256F-S42	0	42	149.6
GT1256F-P0610-S12	6	12	79.4	GT1256F-P0410-S38	4	38	149.6
GT1256F-P0810-S10	8	10	79.4	GT1256F-S48	0	48	166.4

Note: N channels 10A rings parallel can be used as 1 channel N*10A current. For example: 2 rings 10A parallel could be used as 1 wires 20A. 10A,5A (signal) can combine freely in any way.It can be customized based on standard slip ring,please contact customer service for more detmails.

Specifications

Electrical Data		
Parameter	Value	
	Power	Signal
Rated Voltage	0~440VAC/VDC	0~440VAC/VDC
Insulation Resistance	≥1000MΩ/500VDC	≥1000MΩ/500VDC
Lead Wires	AWG16#Teflon	AWG22#Teflon
Lead Length	Standard 300mm(adjustable)	
Insulation Strength	800VAC@50Hz , 60s	
Electrical Noise	<0.01Ω	
Mechanical Data		
Parameter	Value	
Working Life	100 Million Revs	
Rotating Speed	ID<60mm,1800RPM	
	60mm<ID<120mm,1200RPM	
	ID>120mm,800RPM	
Working Temperature	-30℃~80℃	
Operating Humidity	0~85% RH	
Contact Material	Precious Metal	
Housing Material	Aluminium Alloy	
Torque	0.1N.m ; +0.03N.m/6rings	
Protection Grade	IP51	

Lead Wires Color Code

Ring	1	2	3	4	5	6	7	8	9	10	11	12
Color	BLK	RED	YEL	GRN	BLU	WHT	BLK	RED	YEL	GRN	BLU	WHT

(6 wires for 1 group color, from 7-12, repeat the same color as 1...6, indicated with number code pipe)

Options For Custom Slip Ring

Note: Below special demands can be customized. According, the delivery date will be extended 3 to 15 days; also the cost will be increased 30% to 50%. Most of our basic parts are standard and modular, which can save the cost and lead time.

① Cable exit way and cable length can be customized for both rotor and stator.
② Because of the structure limitation, length/height/OD can be customized on your request.
③ Support current or signal up to 200 rings.
④ Aviation plug, terminal and heat-shrink tube are optional.
⑤ Hybrid slip ring for Yaskawa/Panasonic/Siemens servo control signal, power line and encoder line.
⑥ Support mixed high speed data transmission (including Ethernet, USB, RS232, RS485, Profibus, CanBUS, CANOPEN, DeviceNET, CC-LINK, ProfiNET, EtherCAT, etc.)
⑦ Can combine temperature control signal with thermocouple signal.
⑧ Special environment can be customized, such as quakeproof, high temperature, etc.
⑨ Hybrid Pneumatic/hydraulic and electric slip ring can be mixed.
⑩ High temperature can up to 500 degrees.
⑪ High pressure can up to 110KV
⑫ Rotating speed can up to 10000RPM
⑬ Maximum current can up to 5000 amperes.
⑭ Military grade
⑮ Optional for underwater IP65, IP68.
⑯ Optional for stainless steel housing

Technical support: technical@moflon.com

GT2069 Series

GT2069 series provides a 20mm through-bore for routing of hydraulic or pneumatic lines or hydraulic or pneumatic rotating shaft installation, and a compact 69mm outside diameter,features long life, fiber brush contact technology for ultimate performance in manychallenging applications.
GT2069 series are standard, off-the-shelf products, Color-coded lead wires are used onboth the stator and rotor for simplified electrical connections.It can transmit signal(2A), 10A, multiple 10A current when 360° degree free rotating.

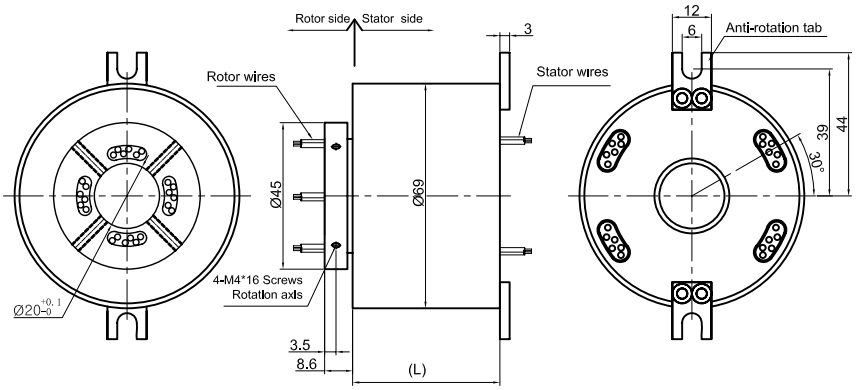

Part# Explanation

GT 2069 - P 06 10- S 06

- GT:through bore slip ring
- 2069:20-ID 20mm;69-OD 69mm
- p:power ring
- 0610:06-6rings;10-rated 10A/ring
- 06:6 rings
- S:signal(5A)

Part# List

GT2069 Series Parts# List							
Part#	10A	Signal or 5A	Length-L (mm)	Part#	10A	Signal or 5A	Length-L (mm)
GT2069-S02	0	2	39.2	GT2069-P1210-S06	12	6	93.6
GT2069-P0210	2	0	39.2	GT2069-P1410-S04	14	4	93.6
GT2069-S03	0	3	42.6	GT2069-P1610-S02	16	2	93.6
GT2069-P0310	3	0	42.6	GT2069-P1810	18	0	93.6
GT2069-S06	0	6	52.8	GT2069-S24	0	24	114
GT2069-P0210-S04	2	4	52.8	GT2069-P0410-S20	4	20	114
GT2069-P0410-S02	4	2	52.8	GT2069-P0610-S18	6	18	114
GT2069-P0610	6	0	52.8	GT2069-P1210-S12	12	12	114
GT2069-S12	0	12	73.2	GT2069-P1810-S06	18	6	114
GT2069-P0210-S10	2	10	73.2	GT2069-P2410	24	0	114
GT2069-P0310-S09	3	9	73.2	GT2069-S30	0	30	134.4
GT2069-P0610-S06	6	6	73.2	GT2069-P0210-S28	2	28	134.4
GT2069-P0810-S04	8	4	73.2	GT2069-P0410-S26	4	26	134.4
GT2069-P1010-S02	10	2	73.2	GT2069-P0610-S24	6	24	134.4
GT2069-P1210	12	0	73.2	GT2069-S36	0	36	157.8
GT2069-S18	0	18	93.6	GT2069-P0410-S32	4	32	157.8
GT2069-P0210-S16	2	16	93.6	GT2069-P0610-S30	6	30	157.8
GT2069-P0410-S14	4	14	93.6	GT2069-S42	0	42	178.2
GT2069-P0610-S12	6	12	93.6	GT2069-P0210-S40	2	40	178.2
GT2069-P0810-S10	8	10	93.6	GT2069-P0410-S38	4	38	178.2
GT2069-P1010-S08	10	8	93.6	GT2069-S48	0	48	202.8

Note: N channels 10A rings parallel can be used as 1 channel N*10A current. For example: 2 rings 10A parallel could be used as 1 wires 20A. 10A,5A (signal) can combine freely in any way.It can be customized based on standard slip ring,please contact customer service for more detmails.

Specifications

Electrical Data		
Parameter	Value	
	Power	Signal
Rated Voltage	0~440VAC/VDC	0~440VAC/VDC
Insulation Resistance	≥1000MΩ/500VDC	≥1000MΩ/500VDC
Lead Wires	AWG16#Teflon	AWG22#Teflon
Lead Length	Standard 300mm(adjustable)	
Insulation Strength	800VAC@50Hz，60s	
Electrical Noise	<0.01Ω	
Mechanical Data		
Parameter	Value	
Working Life	100 Million Revs	
Rotating Speed	ID<60mm,1800RPM	
	60mm<ID<120mm,1200RPM	
	ID>120mm,800RPM	
Working Temperature	-30℃~80℃	
Operating Humidity	0~85% RH	
Contact Material	Precious Metal	
Housing Material	Aluminium Alloy	
Torque	0.1N.m；+0.03N.m/6rings	
Protection Grade	IP51	

Lead Wires Color Code

Ring	1	2	3	4	5	6	7	8	9	10	11	12
Color	BLK	RED	YEL	GRN	BLU	WHT	BLK	RED	YEL	GRN	BLU	WHT

(6 wires for 1 group color, from 7-12, repeat the same color as 1...6, indicated with number code pipe)

Options For Custom Slip Ring

Note: Below special demands can be customized. According, the delivery date will be extended 3 to 15 days; also the cost will be increased 30% to 50%. Most of our basic parts are standard and modular, which can save the cost and lead time.

① Cable exit way and cable length can be customized for both rotor and stator.
② Because of the structure limitation, length/height/OD can be customized on your request.
③ Support current or signal up to 200 rings.
④ Aviation plug, terminal and heat-shrink tube are optional.
⑤ Hybrid slip ring for Yaskawa/Panasonic/Siemens servo control signal, power line and encoder line.
⑥ Support mixed high speed data transmission (including Ethernet, USB, RS232, RS485, Profibus, CanBUS, CANOPEN, DeviceNET, CC-LINK, ProfiNET, EtherCAT, etc.)
⑦ Can combine temperature control signal with thermocouple signal.
⑧ Special environment can be customized, such as quakeproof, high temperature, etc.
⑨ Hybrid Pneumatic/hydraulic and electric slip ring can be mixed.
⑩ High temperature can up to 500 degrees.
⑪ High pressure can up to 110KV
⑫ Rotating speed can up to 10000RPM
⑬ Maximum current can up to 5000 amperes.
⑭ Military grade
⑮ Optional for underwater IP65, IP68.
⑯ Optional for stainless steel housing

Technical support: technical@moflon.com

GT2069F Series

GT2069F series provides a 20mm through-bore for routing of hydraulic or pneumatic lines or hydraulic or pneumatic rotating shaft installation, and a compact 69mm outside diameter,features long life, fiber brush contact technology for ultimate performance in manychallenging applications.
GT2069F series are standard, off-the-shelf products, Color-coded lead wires are used onboth the stator and rotor for simplified electrical connections.It can transmit signal(2A), 10A, multiple 10A current when 360° degree free rotating.

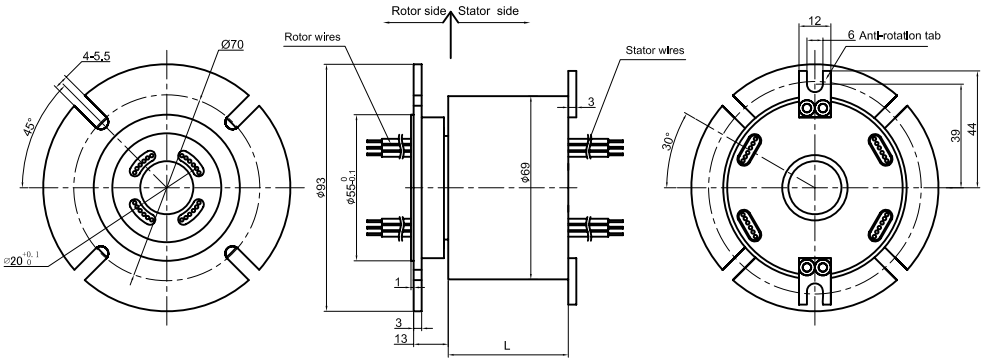

Part# Explanation

GT 2069F - P 06 10- S 06

- GT:through bore slip ring
- 2069:20-ID 20mm;69-OD 69mm
- F:with rotor flange style
- P:power ring
- 0610:06-6rings;10-rated 10A/ring
- 06:6 rings
- S:signal(5A)

Part# List

GT2069F Series Parts# List							
Part#	10A	Signal or 5A	Length-L (mm)	Part#	10A	Signal or 5A	Length-L (mm)
GT2069F-S02	0	2	39.2	GT2069F-P1210-S06	12	6	93.6
GT2069F-P0210	2	0	39.2	GT2069F-P1410-S04	14	4	93.6
GT2069F-S03	0	3	42.6	GT2069F-P1610-S02	16	2	93.6
GT2069F-P0310	3	0	42.6	GT2069F-P1810	18	0	93.6
GT2069F-S06	0	6	52.8	GT2069F-S24	0	24	114
GT2069F-P0210-S04	2	4	52.8	GT2069F-P0410-S20	4	20	114
GT2069F-P0410-S02	4	2	52.8	GT2069F-P0610-S18	6	18	114
GT2069F-P0610	6	0	52.8	GT2069F-P1210-S12	12	12	114
GT2069F-S12	0	12	73.2	GT2069F-P1810-S06	18	6	114
GT2069F-P0210-S10	2	10	73.2	GT2069F-P2410	24	0	114
GT2069F-P0310-S09	3	9	73.2	GT2069F-S30	0	30	134.4
GT2069F-P0610-S06	6	6	73.2	GT2069F-P0210-S28	2	28	134.4
GT2069F-P0810-S04	8	4	73.2	GT2069F-P0410-S26	4	26	134.4
GT2069F-P1010-S02	10	2	73.2	GT2069F-P0610-S24	6	24	134.4
GT2069F-P1210	12	0	73.2	GT2069F-S36	0	36	157.8
GT2069F-S18	0	18	93.6	GT2069F-P0410-S32	4	32	157.8
GT2069F-P0210-S16	2	16	93.6	GT2069F-P0610-S30	6	30	157.8
GT2069F-P0410-S14	4	14	93.6	GT2069F-S42	0	42	178.2
GT2069F-P0610-S12	6	12	93.6	GT2069F-P0210-S40	2	40	178.2
GT2069F-P0810-S10	8	10	93.6	GT2069F-P0410-S38	4	38	178.2
GT2069F-P1010-S08	10	8	93.6	GT2069F-S48	0	48	202.8

Note: N channels 10A rings parallel can be used as 1 channel N*10A current. For example: 2 rings 10A parallel could be used as 1 wires 20A. 10A,5A (signal) can combine freely in any way.It can be customized based on standard slip ring,please contact customer service for more detmails.

Specifications

Electrical Data		
Parameter	Value	
	Power	Signal
Rated Voltage	0~440VAC/VDC	0~440VAC/VDC
Insulation Resistance	≥1000MΩ/500VDC	≥1000MΩ/500VDC
Lead Wires	AWG16#Teflon	AWG22#Teflon
Lead Length	Standard 300mm(adjustable)	
Insulation Strength	800VAC@50Hz，60s	
Electrical Noise	<0.01Ω	
Mechanical Data		
Parameter	Value	
Working Life	100 Million Revs	
Rotating Speed	ID<60mm,1800RPM	
	60mm<ID<120mm,1200RPM	
	ID>120mm,800RPM	
Working Temperature	-30℃~80℃	
Operating Humidity	0~85% RH	
Contact Material	Precious Metal	
Housing Material	Aluminium Alloy	
Torque	0.1N.m；+0.03N.m/6rings	
Protection Grade	IP51	

Lead Wires Color Code

Ring	1	2	3	4	5	6	7	8	9	10	11	12
Color	BLK	RED	YEL	GRN	BLU	WHT	BLK	RED	YEL	GRN	BLU	WHT

(6 wires for 1 group color, from 7-12, repeat the same color as 1...6, indicated with number code pipe)

Options For Custom Slip Ring

Note: Below special demands can be customized. According, the delivery date will be extended 3 to 15 days; also the cost will be increased 30% to 50%. Most of our basic parts are standard and modular, which can save the cost and lead time.

① Cable exit way and cable length can be customized for both rotor and stator.
② Because of the structure limitation, length/height/OD can be customized on your request.
③ Support current or signal up to 200 rings.
④ Aviation plug, terminal and heat-shrink tube are optional.
⑤ Hybrid slip ring for Yaskawa/Panasonic/Siemens servo control signal, power line and encoder line.
⑥ Support mixed high speed data transmission (including Ethernet, USB, RS232, RS485, Profibus, CanBUS, CANOPEN, DeviceNET, CC-LINK, ProfiNET, EtherCAT, etc.)
⑦ Can combine temperature control signal with thermocouple signal.
⑧ Special environment can be customized, such as quakeproof, high temperature, etc.
⑨ Hybrid Pneumatic/hydraulic and electric slip ring can be mixed.
⑩ High temperature can up to 500 degrees.
⑪ High pressure can up to 110KV
⑫ Rotating speed can up to 10000RPM
⑬ Maximum current can up to 5000 amperes.
⑭ Military grade
⑮ Optional for underwater IP65, IP68.
⑯ Optional for stainless steel housing

Technical support: technical@moflon.com

GT2586 Series

GT2586 series provides a 25.4mm through-bore for routing of hydraulic or pneumatic lines or hydraulic or pneumatic rotating shaft installation, and a compact 86mm outside diameter,features long life, fiber brush contact technology for ultimate performance in manychallenging applications.
GT2586 series are standard, off-the-shelf products, Color-coded lead wires are used onboth the stator and rotor for simplified electrical connections.It can transmit signal(2A), 10A, multiple 10A current when 360° degree free rotating.

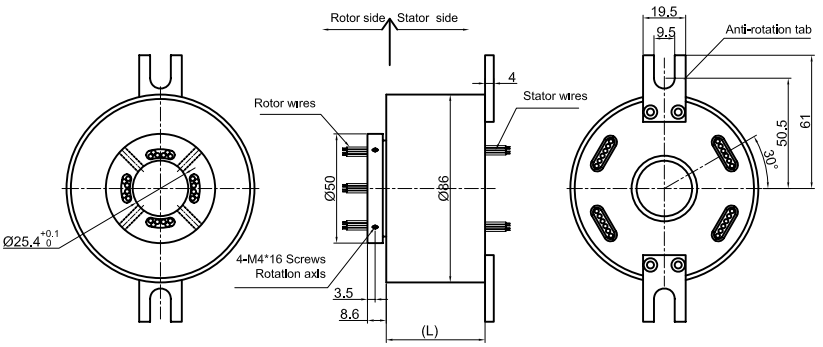

Part# Explanation

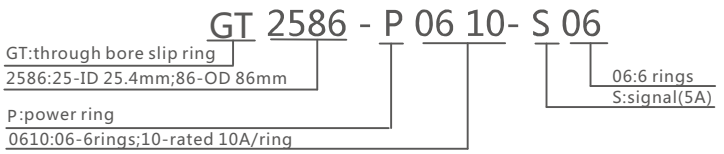

Part# List

GT2586 Series Parts# List							
Part#	10A	Signal or 5A	Length-L (mm)	Part#	10A	Signal or 5A	Length-L (mm)
GT2586-S02	0	2	39.2	GT2586-P1210-S12	12	12	114
GT2586-P0210	2	0	39.2	GT2586-P1810-S06	18	6	114
GT2586-S03	0	3	42.6	GT2586-P2410	24	0	114
GT2586-P0310	3	0	42.6	GT2586-S30	0	30	134.4
GT2586-S06	0	6	52.8	GT2586-P0610-S24	6	24	134.4
GT2586-P0210-S04	2	4	52.8	GT2586-P1210-S18	12	18	134.4
GT2586-P0410-S02	4	2	52.8	GT2586-P1810-S12	18	12	134.4
GT2586-P0610	6	0	52.8	GT2586-P2410-S06	24	6	134.4
GT2586-S12	0	12	73.2	GT2586-P3010	30	0	134.4
GT2586-P0210-S10	2	10	73.2	GT2586-S36	0	36	157.8
GT2586-P0310-S09	3	9	73.2	GT2586-P0610-S30	6	30	157.8
GT2586-P0610-S06	6	6	73.2	GT2586-P1210-S24	12	24	157.8
GT2586-P0810-S04	8	4	73.2	GT2586-P3610	36	0	157.8
GT2586-P1010-S02	10	2	73.2	GT2586-S42	0	42	178.2
GT2586-P1210	12	0	73.2	GT2586-P0610-S36	6	36	178.2
GT2586-S18	0	18	93.6	GT2586-P1210-S30	12	30	178.2
GT2586-P0210-S16	2	16	93.6	GT2586-S48	0	48	198.6
GT2586-P0410-S14	4	14	93.6	GT2586-P0610-S42	6	42	198.6
GT2586-P0610-S12	6	12	93.6	GT2586-P0910-S39	9	39	198.6
GT2586-P0810-S10	8	10	93.6	GT2586-P1210-S36	12	36	198.6
GT2586-P1010-S08	10	8	93.6	GT2586-P1810-S30	18	30	198.6
GT2586-P1210-S06	12	6	93.6	GT2586-P2410-S24	24	24	198.6
GT2586-P1410-S04	14	4	93.6	GT2586-S60	0	60	242.4
GT2586-P1610-S02	16	2	93.6	GT2586-P0610-S54	6	54	242.4
GT2586-P1810	18	0	93.6	GT2586-P0810-S52	8	52	242.4
GT2586-S24	0	24	114	GT2586-P1010-S0	10	50	242.4
GT2586-P0410-S20	4	20	114	GT2586-P1210-S48	12	48	242.4
GT2586-P0610-S18	6	18	114	GT2586-S72	0	72	283.2

Note: N channels 10A rings parallel can be used as 1 channel N*10A current. For example: 2 rings 10A parallel could be used as 1 wires 20A. 10A,5A (signal) can combine freely in any way.It can be customized based on standard slip ring,please contact customer service for more detmails.

Specifications

Electrical Data		
Parameter	Value	
	Power	Signal
Rated Voltage	0~440VAC/VDC	0~440VAC/VDC
Insulation Resistance	≥1000MΩ/500VDC	≥1000MΩ/500VDC
Lead Wires	AWG16#Teflon	AWG22#Teflon
Lead Length	Standard 300mm(adjustable)	
Insulation Strength	1000VAC@50Hz，60s	
Electrical Noise	<0.01Ω	
Mechanical Data		
Parameter	Value	
Working Life	100 Million Revs	
Rotating Speed	ID<60mm,1800RPM	
	60mm<ID<120mm,1200RPM	
	ID>120mm,800RPM	
Working Temperature	-30℃~80℃	
Operating Humidity	0~85% RH	
Contact Material	Precious Metal	
Housing Material	Aluminium Alloy	
Torque	0.1N.m；+0.03N.m/6rings	
Protection Grade	IP51	

Lead Wires Color Code

Ring	1	2	3	4	5	6	7	8	9	10	11	12
Color	BLK	RED	YEL	GRN	BLU	WHT	BLK	RED	YEL	GRN	BLU	WHT

(6 wires for 1 group color, from 7-12, repeat the same color as 1...6, indicated with number code pipe)

Options For Custom Slip Ring

Note: Below special demands can be customized. According, the delivery date will be extended 3 to 15 days; also the cost will be increased 30% to 50%. Most of our basic parts are standard and modular, which can save the cost and lead time.

① Cable exit way and cable length can be customized for both rotor and stator.
② Because of the structure limitation, length/height/OD can be customized on your request.
③ Support current or signal up to 200 rings.
④ Aviation plug, terminal and heat-shrink tube are optional.
⑤ Hybrid slip ring for Yaskawa/Panasonic/Siemens servo control signal, power line and encoder line.
⑥ Support mixed high speed data transmission (including Ethernet, USB, RS232, RS485, Profibus, CanBUS, CANOPEN, DeviceNET, CC-LINK, ProfiNET, EtherCAT, etc.)
⑦ Can combine temperature control signal with thermocouple signal.
⑧ Special environment can be customized, such as quakeproof, high temperature, etc.
⑨ Hybrid Pneumatic/hydraulic and electric slip ring can be mixed.
⑩ High temperature can up to 500 degrees.
⑪ High pressure can up to 110KV
⑫ Rotating speed can up to 10000RPM
⑬ Maximum current can up to 5000 amperes.
⑭ Military grade
⑮ Optional for underwater IP65, IP68.
⑯ Optional for stainless steel housing

Technical support: technical@moflon.com

GT2586F Series

GT2586F series provides a 25.4mm through-bore for routing of hydraulic or pneumatic lines or hydraulic or pneumatic rotating shaft installation, and a compact 86mm outside diameter,features long life, fiber brush contact technology for ultimate performance in manychallenging applications.
GT2586F series are standard, off-the-shelf products, Color-coded lead wires are used onboth the stator and rotor for simplified electrical connections.It can transmit signal(2A), 10A, multiple 10A current when 360° degree free rotating.

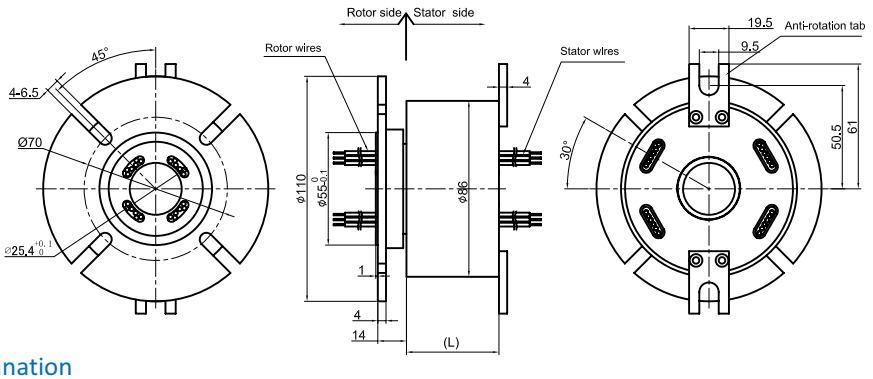

Part# Explanation

GT 2586F - P 06 10- S 06

- GT:through bore slip ring
- 2586:25-ID 25.4mm;86-OD 86mm
- F:with rotor flange style
- P:power ring
- 0610:06-6rings;10-rated 10A/ring
- 06:6 rings
- S:signal(5A)

Part# List

GT2586F Series Parts# List							
Part#	10A	Signal or 5A	Length-L (mm)	Part#	10A	Signal or 5A	Length-L (mm)
GT2586F-S02	0	2	39.2	GT2586F-P1210-S12	12	12	114
GT2586F-P0210	2	0	39.2	GT2586F-P1810-S06	18	6	114
GT2586F-S03	0	3	42.6	GT2586F-P2410	24	0	114
GT2586F-P0310	3	0	42.6	GT2586F-S30	0	30	134.4
GT2586F-S06	0	6	52.8	GT2586F-P0610-S24	6	24	134.4
GT2586F-P0210-S04	2	4	52.8	GT2586F-P1210-S18	12	18	134.4
GT2586F-P0410-S02	4	2	52.8	GT2586F-P1810-S12	18	12	134.4
GT2586F-P0610	6	0	52.8	GT2586F-P2410-S06	24	6	134.4
GT2586F-S12	0	12	73.2	GT2586F-P3010	30	0	134.4
GT2586F-P0210-S10	2	10	73.2	GT2586F-S36	0	36	157.8
GT2586F-P0310-S09	3	9	73.2	GT2586F-P0610-S30	6	30	157.8
GT2586F-P0610-S06	6	6	73.2	GT2586F-P1210-S24	12	24	157.8
GT2586F-P0810-S04	8	4	73.2	GT2586F-P3610	36	0	157.8
GT2586F-P1010-S02	10	2	73.2	GT2586F-S42	0	42	178.2
GT2586F-P1210	12	0	73.2	GT2586F-P0610-S36	6	36	178.2
GT2586F-S18	0	18	93.6	GT2586F-P1210-S30	12	30	178.2
GT2586F-P0210-S16	2	16	93.6	GT2586F-S48	0	48	198.6
GT2586F-P0410-S14	4	14	93.6	GT2586F-P0610-S42	6	42	198.6
GT2586F-P0610-S12	6	12	93.6	GT2586F-P0910-S39	9	39	198.6
GT2586F-P0810-S10	8	10	93.6	GT2586F-P1210-S36	12	36	198.6
GT2586F-P1010-S08	10	8	93.6	GT2586F-P1810-S30	18	30	198.6
GT2586F-P1210-S06	12	6	93.6	GT2586F-P2410-S24	24	24	198.6
GT2586F-P1410-S04	14	4	93.6	GT2586F-S60	0	60	242.4
GT2586F-P1610-S02	16	2	93.6	GT2586F-P0610-S54	6	54	242.4
GT2586F-P1810	18	0	93.6	GT2586F-P0810-S52	8	52	242.4
GT2586F-S24	0	24	114	GT2586F-P1010-S0	10	50	242.4
GT2586F-P0410-S20	4	20	114	GT2586F-P1210-S48	12	48	242.4
GT2586F-P0610-S18	6	18	114	GT2586F-S72	0	72	283.2

Note: N channels 10A rings parallel can be used as 1 channel N*10A current. For example: 2 rings 10A parallel could be used as 1 wires 20A. 10A,5A (signal) can combine freely in any way.It can be customized based on standard slip ring,please contact customer service for more detmails.

Specifications

Electrical Data		
Parameter	Value	
	Power	Signal
Rated Voltage	0~690VAC/VDC	0~440VAC/VDC
Insulation Resistance	≥1000MΩ/500VDC	≥1000MΩ/500VDC
Lead Wires	AWG16#Teflon	AWG22#Teflon
Lead Length	Standard 300mm(adjustable)	
Insulation Strength	1000VAC@50Hz , 60s	
Electrical Noise	<0.01Ω	
Mechanical Data		
Parameter	Value	
Working Life	100 Million Revs	
Rotating Speed	ID<60mm,1800RPM	
	60mm<ID<120mm,1200RPM	
	ID>120mm,800RPM	
Working Temperature	-30℃~80℃	
Operating Humidity	0~85% RH	
Contact Material	Precious Metal	
Housing Material	Aluminium Alloy	
Torque	0.1N.m ; +0.03N.m/6rings	
Protection Grade	IP51	

Lead Wires Color Code

Ring	1	2	3	4	5	6	7	8	9	10	11	12
Color	BLK	RED	YEL	GRN	BLU	WHT	BLK	RED	YEL	GRN	BLU	WHT

(6 wires for 1 group color, from 7-12, repeat the same color as 1...6, indicated with number code pipe)

Options For Custom Slip Ring

Note: Below special demands can be customized. According, the delivery date will be extended 3 to 15 days; also the cost will be increased 30% to 50%. Most of our basic parts are standard and modular, which can save the cost and lead time.

① Cable exit way and cable length can be customized for both rotor and stator.
② Because of the structure limitation, length/height/OD can be customized on your request.
③ Support current or signal up to 200 rings.
④ Aviation plug, terminal and heat-shrink tube are optional.
⑤ Hybrid slip ring for Yaskawa/Panasonic/Siemens servo control signal, power line and encoder line.
⑥ Support mixed high speed data transmission (including Ethernet, USB, RS232, RS485, Profibus, CanBUS, CANOPEN, DeviceNET, CC-LINK, ProfiNET, EtherCAT, etc.)
⑦ Can combine temperature control signal with thermocouple signal.
⑧ Special environment can be customized, such as quakeproof, high temperature, etc.
⑨ Hybrid Pneumatic/hydraulic and electric slip ring can be mixed.
⑩ High temperature can up to 500 degrees.
⑪ High pressure can up to 110KV
⑫ Rotating speed can up to 10000RPM
⑬ Maximum current can up to 5000 amperes.
⑭ Military grade
⑮ Optional for underwater IP65, IP68.
⑯ Optional for stainless steel housing

Technical support: technical@moflon.com

GT3099 Series

GT3099 series provides a 30mm through-bore for routing of hydraulic or pneumatic lines or hydraulic or pneumatic rotating shaft installation, and a compact 99mm outside diameter,features long life, fiber brush contact technology for ultimate performance in manychallenging applications.
GT3099 series are standard, off-the-shelf products, Color-coded lead wires are used onboth the stator and rotor for simplified electrical connections.It can transmit signal(2A), 10A, multiple 10A current when 360° degree free rotating.

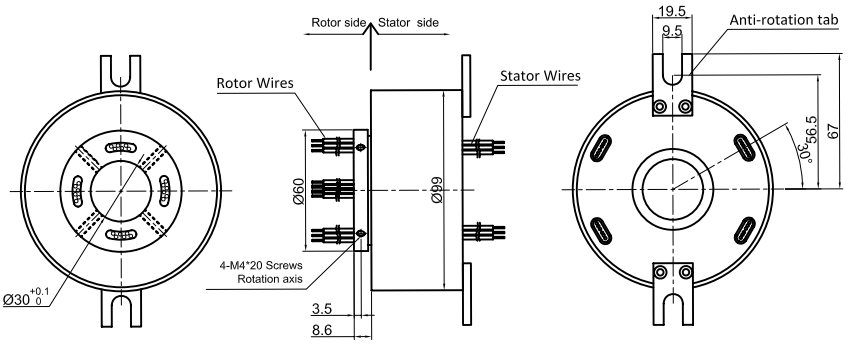

Part# Explanation

GT 3099 - P 06 10- S 06

- GT:through bore slip ring
- 3099:30-ID 30mm;99-OD 99mm
- P:power ring
- 0610:06-6rings;10-rated 10A/ring
- 06:6 rings
- S:signal(5A)

Part# List

GT3099 Series Parts# List							
Part#	10A	Signal or 5A	Length-L (mm)	Part#	10A	Signal or 5A	Length-L (mm)
GT3099-S02	0	2	39.2	GT3099-P1210-S12	12	12	114
GT3099-P0210	2	0	39.2	GT3099-P1810-S06	18	6	114
GT3099-S03	0	3	42.6	GT3099-P2410	24	0	114
GT3099-P0310	3	0	42.6	GT3099-S30	0	30	134.4
GT3099-S06	0	6	52.8	GT3099-P0610-S24	6	24	134.4
GT3099-P0210-S04	2	4	52.8	GT3099-P1210-S18	12	18	134.4
GT3099-P0410-S02	4	2	52.8	GT3099-P1810-S12	18	12	134.4
GT3099-P0610	6	0	52.8	GT3099-P2410-S06	24	6	134.4
GT3099-S12	0	12	73.2	GT3099-P3010	30	0	134.4
GT3099-P0210-S10	2	10	73.2	GT3099-S36	0	36	157.8
GT3099-P0310-S09	3	9	73.2	GT3099-P0610-S30	6	30	157.8
GT3099-P0610-S06	6	6	73.2	GT3099-P1210-S24	12	24	157.8
GT3099-P0810-S04	8	4	73.2	GT3099-P3610	36	0	157.8
GT3099-P1010-S02	10	2	73.2	GT3099-S42	0	42	178.2
GT3099-P1210	12	0	73.2	GT3099-P0610-S36	6	36	178.2
GT3099-S18	0	18	93.6	GT3099-P1210-S30	12	30	178.2
GT3099-P0210-S16	2	16	93.6	GT3099-S48	0	48	198.6
GT3099-P0410-S14	4	14	93.6	GT3099-P0610-S42	6	42	198.6
GT3099-P0610-S12	6	12	93.6	GT3099-P0910-S39	9	39	198.6
GT3099-P0810-S10	8	10	93.6	GT3099-P1210-S36	12	36	198.6
GT3099-P1010-S08	10	8	93.6	GT3099-P1810-S30	18	30	198.6
GT3099-P1210-S06	12	6	93.6	GT3099-P2410-S24	24	24	198.6
GT3099-P1410-S04	14	4	93.6	GT3099-S60	0	60	242.4
GT3099-P1610-S02	16	2	93.6	GT3099-P0610-S54	6	54	242.4
GT3099-P1810	18	0	93.6	GT3099-P0810-S52	8	52	242.4
GT3099-S24	0	24	114	GT3099-P1010-S0	10	50	242.4

GT3099-P0410-S20	4	20	114	GT3099F-P1210-S48	12	48	242.4
GT3099-P0610-S18	6	18	114	GT3099F-S72	0	72	283.2

Note: N channels 10A rings parallel can be used as 1 channel N*10A current. For example: 2 rings 10A parallel could be used as 1 wires 20A. 10A,5A (signal) can combine freely in any way.It can be customized based on standard slip ring,please contact customer service for more detmails.

Specifications

Electrical Data		
Parameter	Value	
	Power	Signal
Rated Voltage	0~690VAC/VDC	0~440VAC/VDC
Insulation Resistance	≥1000MΩ/500VDC	≥1000MΩ/500VDC
Lead Wires	AWG16#Teflon	AWG16#Teflon
Lead Length	Standard 300mm(adjustable)	
Insulation Strength	1000VAC@50Hz , 60s	
Electrical Noise	<0.01Ω	
Mechanical Data		
Parameter	Value	
Working Life	100 Million Revs	
Rotating Speed	ID<60mm,1800RPM	
	60mm<ID<120mm,1200RPM	
	ID>120mm,800RPM	
Working Temperature	-30℃~80℃	
Operating Humidity	0~85% RH	
Contact Material	Precious Metal	
Housing Material	Aluminium Alloy	
Torque	0.1N.m ; +0.03N.m/6rings	
Protection Grade	IP51	

Lead Wires Color Code

Ring	1	2	3	4	5	6	7	8	9	10	11	12
Color	BLK	RED	YEL	GRN	BLU	WHT	BLK	RED	YEL	GRN	BLU	WHT

(6 wires for 1 group color, from 7-12, repeat the same color as 1...6, indicated with number code pipe)

Options For Custom Slip Ring

Note: Below special demands can be customized. According, the delivery date will be extended 3 to 15 days; also the cost will be increased 30% to 50%. Most of our basic parts are standard and modular, which can save the cost and lead time.

① Cable exit way and cable length can be customized for both rotor and stator.
② Because of the structure limitation, length/height/OD can be customized on your request.
③ Support current or signal up to 200 rings.
④ Aviation plug, terminal and heat-shrink tube are optional.
⑤ Hybrid slip ring for Yaskawa/Panasonic/Siemens servo control signal, power line and encoder line.
⑥ Support mixed high speed data transmission (including Ethernet, USB, RS232, RS485, Profibus, CanBUS, CANOPEN, DeviceNET, CC-LINK, ProfiNET, EtherCAT, etc.)
⑦ Can combine temperature control signal with thermocouple signal.
⑧ Special environment can be customized, such as quakeproof, high temperature, etc.
⑨ Hybrid Pneumatic/hydraulic and electric slip ring can be mixed.
⑩ High temperature can up to 500 degrees.
⑪ High pressure can up to 110KV
⑫ Rotating speed can up to 10000RPM
⑬ Maximum current can up to 5000 amperes.
⑭ Military grade
⑮ Optional for underwater IP65, IP68.
⑯ Optional for stainless steel housing

Technical support: technical@moflon.com

GT3099F Series

GT3099F series provides a 30mm through-bore for routing of hydraulic or pneumatic lines or hydraulic or pneumatic rotating shaft installation, and a compact 99mm outside diameter,features long life, fiber brush contact technology for ultimate performance in manychallenging applications.
GT3099F series are standard, off-the-shelf products, Color-coded lead wires are used onboth the stator and rotor for simplified electrical connections.It can transmit signal(2A), 10A, multiple 10A current when 360° degree free rotating.

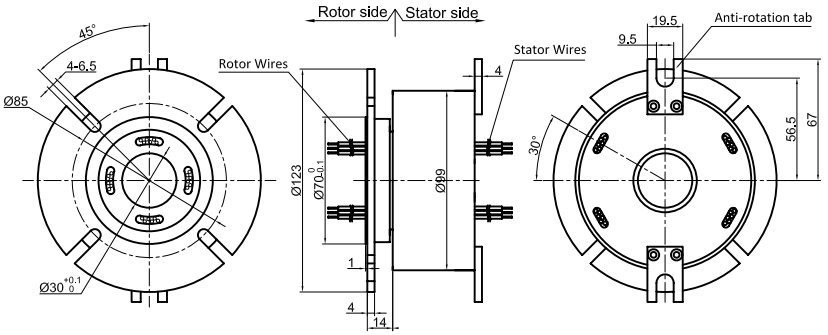

Part# Explanation

GT 3099F - P 06 10- S 06

- GT:through bore slip ring
- 3099:30-ID 30mm;99-OD 99mm
- F:with rotor flange style
- P:power ring
- 0610:06-6rings;10-rated 10A/ring
- 06:6 rings
- S:signal(5A)

Part# List

GT3099F Series Parts# List							
Part#	10A	Signal or 5A	Length-L (mm)	Part#	10A	Signal or 5A	Length-L (mm)
GT3099F-S02	0	2	39.2	GT3099F-P1210-S12	12	12	114
GT3099F-P0210	2	0	39.2	GT3099F-P1810-S06	18	6	114
GT3099F-S03	0	3	42.6	GT3099F-P2410	24	0	114
GT3099F-P0310	3	0	42.6	GT3099F-S30	0	30	134.4
GT3099F-S06	0	6	52.8	GT3099F-P0610-S24	6	24	134.4
GT3099F-P0210-S04	2	4	52.8	GT3099F-P1210-S18	12	18	134.4
GT3099F-P0410-S02	4	2	52.8	GT3099F-P1810-S12	18	12	134.4
GT3099F-P0610	6	0	52.8	GT3099F-P2410-S06	24	6	134.4
GT3099F-S12	0	12	73.2	GT3099F-P3010	30	0	134.4
GT3099F-P0210-S10	2	10	73.2	GT3099F-S36	0	36	157.8
GT3099F-P0310-S09	3	9	73.2	GT3099F-P0610-S30	6	30	157.8
GT3099F-P0610-S06	6	6	73.2	GT3099F-P1210-S24	12	24	157.8
GT3099F-P0810-S04	8	4	73.2	GT3099F-P3610	36	0	157.8
GT3099F-P1010-S02	10	2	73.2	GT3099F-S42	0	42	178.2
GT3099F-P1210	12	0	73.2	GT3099F-P0610-S36	6	36	178.2
GT3099F-S18	0	18	93.6	GT3099F-P1210-S30	12	30	178.2
GT3099F-P0210-S16	2	16	93.6	GT3099F-S48	0	48	198.6
GT3099F-P0410-S14	4	14	93.6	GT3099F-P0610-S42	6	42	198.6
GT3099F-P0610-S12	6	12	93.6	GT3099F-P0910-S39	9	39	198.6
GT3099F-P0810-S10	8	10	93.6	GT3099F-P1210-S36	12	36	198.6
GT3099F-P1010-S08	10	8	93.6	GT3099F-P1810-S30	18	30	198.6
GT3099F-P1210-S06	12	6	93.6	GT3099F-P2410-S24	24	24	198.6
GT3099F-P1410-S04	14	4	93.6	GT3099F-S60	0	60	242.4
GT3099F-P1610-S02	16	2	93.6	GT3099F-P0610-S54	6	54	242.4
GT3099F-P1810	18	0	93.6	GT3099F-P0810-S52	8	52	242.4
GT3099F-S24	0	24	114	GT3099F-P1010-S0	10	50	242.4

GT3099F-P0410-S20	4	20	114	GT3099F-P1210-S48	12	48	242.4
GT3099F-P0610-S18	6	18	114	GT3099F-S72	0	72	283.2

Note: N channels 10A rings parallel can be used as 1 channel N*10A current. For example: 2 rings 10A parallel could be used as 1 wires 20A. 10A,5A (signal) can combine freely in any way.It can be customized based on standard slip ring,please contact customer service for more detmails.

Specifications

Electrical Data		
Parameter	Value	
	Power	Signal
Rated Voltage	0~690VAC/VDC	0~440VAC/VDC
Insulation Resistance	≥1000MΩ/500VDC	≥1000MΩ/500VDC
Lead Wires	AWG16#Teflon	AWG16#Teflon
Lead Length	Standard 300mm(adjustable)	
Insulation Strength	1000VAC@50Hz , 60s	
Electrical Noise	<0.01Ω	
Mechanical Data		
Parameter	Value	
Working Life	100 Million Revs	
Rotating Speed	ID<60mm,1800RPM	
	60mm<ID<120mm,1200RPM	
	ID>120mm,800RPM	
Working Temperature	-30℃~80℃	
Operating Humidity	0~85% RH	
Contact Material	Precious Metal	
Housing Material	Aluminium Alloy	
Torque	0.1N.m ; +0.03N.m/6rings	
Protection Grade	IP51	

Lead Wires Color Code

Ring	1	2	3	4	5	6	7	8	9	10	11	12
Color	BLK	RED	YEL	GRN	BLU	WHT	BLK	RED	YEL	GRN	BLU	WHT

(6 wires for 1 group color, from 7-12, repeat the same color as 1...6, indicated with number code pipe)

Options For Custom Slip Ring

Note: Below special demands can be customized. According, the delivery date will be extended 3 to 15 days; also the cost will be increased 30% to 50%. Most of our basic parts are standard and modular, which can save the cost and lead time.

① Cable exit way and cable length can be customized for both rotor and stator.
② Because of the structure limitation, length/height/OD can be customized on your request.
③ Support current or signal up to 200 rings.
④ Aviation plug, terminal and heat-shrink tube are optional.
⑤ Hybrid slip ring for Yaskawa/Panasonic/Siemens servo control signal, power line and encoder line.
⑥ Support mixed high speed data transmission (including Ethernet, USB, RS232, RS485, Profibus, CanBUS, CANOPEN, DeviceNET, CC-LINK, ProfiNET, EtherCAT, etc.)
⑦ Can combine temperature control signal with thermocouple signal.
⑧ Special environment can be customized, such as quakeproof, high temperature, etc.
⑨ Hybrid Pneumatic/hydraulic and electric slip ring can be mixed.
⑩ High temperature can up to 500 degrees.
⑪ High pressure can up to 110KV
⑫ Rotating speed can up to 10000RPM
⑬ Maximum current can up to 5000 amperes.
⑭ Military grade
⑮ Optional for underwater IP65, IP68.
⑯ Optional for stainless steel housing
Technical support: technical@moflon.com

GT3899 Series

GT3899 series provides a 38.1mm through-bore for routing of hydraulic or pneumatic lines or hydraulic or pneumatic rotating shaft installation, and a compact 99mm outside diameter,features long life, fiber brush contact technology for ultimate performance in manychallenging applications.
GT3899 series are standard, off-the-shelf products, Color-coded lead wires are used onboth the stator and rotor for simplified electrical connections.It can transmit signal(2A), 10A, multiple 10A current when 360° degree free rotating.

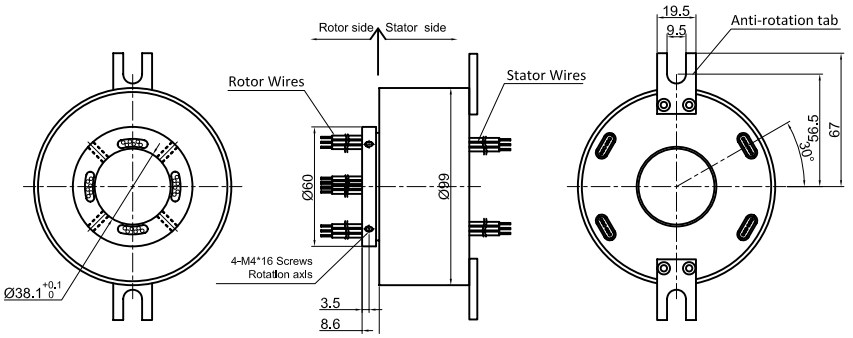

Part# Explanation

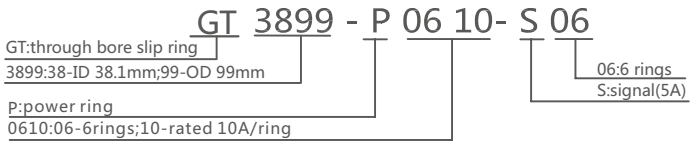

Part# List

GT3899 Series Parts# List							
Part#	10A	Signal or 5A	Length-L (mm)	Part#	10A	Signal or 5A	Length-L (mm)
GT3899-S02	0	2	39.2	GT3899-P1210-S12	12	12	114
GT3899-P0210	2	0	39.2	GT3899-P1810-S06	18	6	114
GT3899-S03	0	3	42.6	GT3899-P2410	24	0	114
GT3899-P0310	3	0	42.6	GT3899-S30	0	30	134.4
GT3899-S06	0	6	52.8	GT3899-P0610-S24	6	24	134.4
GT3899-P0210-S04	2	4	52.8	GT3899-P1210-S18	12	18	134.4
GT3899-P0410-S02	4	2	52.8	GT3899-P1810-S12	18	12	134.4
GT3899-P0610	6	0	52.8	GT3899-P2410-S06	24	6	134.4
GT3899-S12	0	12	73.2	GT3899-P3010	30	0	134.4
GT3899-P0210-S10	2	10	73.2	GT3899-S36	0	36	157.8
GT3899-P0310-S09	3	9	73.2	GT3899-P0610-S30	6	30	157.8
GT3899-P0610-S06	6	6	73.2	GT3899-P1210-S24	12	24	157.8
GT3899-P0810-S04	8	4	73.2	GT3899-P3610	36	0	157.8
GT3899-P1010-S02	10	2	73.2	GT3899-S42	0	42	178.2
GT3899-P1210	12	0	73.2	GT3899-P0610-S36	6	36	178.2
GT3899-S18	0	18	93.6	GT3899-P1210-S30	12	30	178.2
GT3899-P0210-S16	2	16	93.6	GT3899-S48	0	48	198.6
GT3899-P0410-S14	4	14	93.6	GT3899-P0610-S42	6	42	198.6
GT3899-P0610-S12	6	12	93.6	GT3899-P0910-S39	9	39	198.6
GT3899-P0810-S10	8	10	93.6	GT3899-P1210-S36	12	36	198.6
GT3899-P1010-S08	10	8	93.6	GT3899-P1810-S30	18	30	198.6
GT3899-P1210-S06	12	6	93.6	GT3899-P2410-S24	24	24	198.6
GT3899-P1410-S04	14	4	93.6	GT3899-S60	0	60	242.4
GT3899-P1610-S02	16	2	93.6	GT3899-P0610-S54	6	54	242.4
GT3899-P1810	18	0	93.6	GT3899-P0810-S52	8	52	242.4
GT3899-S24	0	24	114	GT3899-P1010-S0	10	50	242.4

GT3899-P0410-S20	4	20	114	GT3899F-P1210-S48	12	48	242.4
GT3899-P0610-S18	6	18	114	GT3899F-S72	0	72	283.2

Note: N channels 10A rings parallel can be used as 1 channel N*10A current. For example: 2 rings 10A parallel could be used as 1 wires 20A. 10A,5A (signal) can combine freely in any way.It can be customized based on standard slip ring,please contact customer service for more detmails.

Specifications

Electrical Data		
Parameter	Value	
	Power	Signal
Rated Voltage	0~690VAC/VDC	0~440VAC/VDC
Insulation Resistance	≥1000MΩ/500VDC	≥1000MΩ/500VDC
Lead Wires	AWG16#Teflon	AWG22#Teflon
Lead Length	Standard 300mm(adjustable)	
Insulation Strength	1000VAC@50Hz , 60s	
Electrical Noise	<0.01Ω	
Mechanical Data		
Parameter	Value	
Working Life	100 Million Revs	
Rotating Speed	ID<60mm,1800RPM	
	60mm<ID<120mm,1200RPM	
	ID>120mm,800RPM	
Working Temperature	-30℃~80℃	
Operating Humidity	0~85% RH	
Contact Material	Precious Metal	
Housing Material	Aluminium Alloy	
Torque	0.1N.m ; +0.03N.m/6rings	
Protection Grade	IP51	

Lead Wires Color Code

Ring	1	2	3	4	5	6	7	8	9	10	11	12
Color	BLK	RED	YEL	GRN	BLU	WHT	BLK	RED	YEL	GRN	BLU	WHT

(6 wires for 1 group color, from 7-12, repeat the same color as 1...6, indicated with number code pipe)

Options For Custom Slip Ring

Note: Below special demands can be customized. According, the delivery date will be extended 3 to 15 days; also the cost will be increased 30% to 50%. Most of our basic parts are standard and modular, which can save the cost and lead time.

① Cable exit way and cable length can be customized for both rotor and stator.
② Because of the structure limitation, length/height/OD can be customized on your request.
③ Support current or signal up to 200 rings.
④ Aviation plug, terminal and heat-shrink tube are optional.
⑤ Hybrid slip ring for Yaskawa/Panasonic/Siemens servo control signal, power line and encoder line.
⑥ Support mixed high speed data transmission (including Ethernet, USB, RS232, RS485, Profibus, CanBUS, CANOPEN, DeviceNET, CC-LINK, ProfiNET, EtherCAT, etc.)
⑦ Can combine temperature control signal with thermocouple signal.
⑧ Special environment can be customized, such as quakeproof, high temperature, etc.
⑨ Hybrid Pneumatic/hydraulic and electric slip ring can be mixed.
⑩ High temperature can up to 500 degrees.
⑪ High pressure can up to 110KV
⑫ Rotating speed can up to 10000RPM
⑬ Maximum current can up to 5000 amperes.
⑭ Military grade
⑮ Optional for underwater IP65, IP68.
⑯ Optional for stainless steel housing

Technical support: technical@moflon.com

GT3899F Series

GT3899F series provides a 38.1mm through-bore for routing of hydraulic or pneumatic lines or hydraulic or pneumatic rotating shaft installation, and a compact 99mm outside diameter,features long life, fiber brush contact technology for ultimate performance in manychallenging applications.
GT3899F series are standard, off-the-shelf products, Color-coded lead wires are used onboth the stator and rotor for simplified electrical connections.It can transmit signal(2A), 10A, multiple 10A current when 360° degree free rotating.

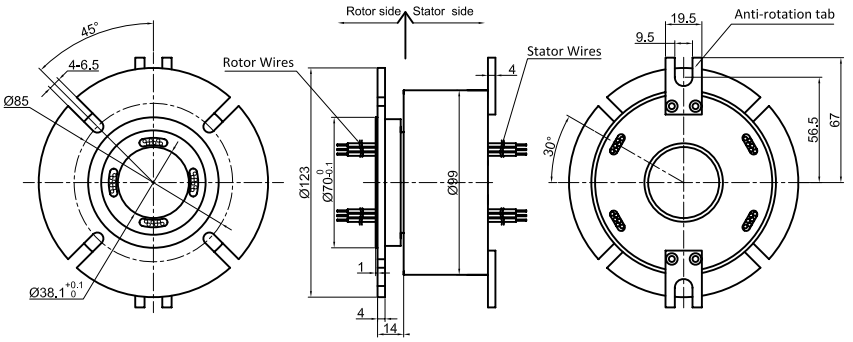

Part# Explanation

GT 3899F - P 06 10- S 06

- GT:through bore slip ring
- 3899:38-ID 38.1mm;99-OD 99mm
- F:with rotor flange style
- P:power ring
- 0610:06-6rings;10-rated 10A/ring
- 06:6 rings
- S:signal(5A)

Part# List

GT3899F Series Parts# List							
Part#	10A	Signal or 5A	Length-L (mm)	Part#	10A	Signal or 5A	Length-L (mm)
GT3899F-S02	0	2	39.2	GT3899F-P1210-S12	12	12	114
GT3899F-P0210	2	0	39.2	GT3899F-P1810-S06	18	6	114
GT3899F-S03	0	3	42.6	GT3899F-P2410	24	0	114
GT3899F-P0310	3	0	42.6	GT3899F-S30	0	30	134.4
GT3899F-S06	0	6	52.8	GT3899F-P0610-S24	6	24	134.4
GT3899F-P0210-S04	2	4	52.8	GT3899F-P1210-S18	12	18	134.4
GT3899F-P0410-S02	4	2	52.8	GT3899F-P1810-S12	18	12	134.4
GT3899F-P0610	6	0	52.8	GT3899F-P2410-S06	24	6	134.4
GT3899F-S12	0	12	73.2	GT3899F-P3010	30	0	134.4
GT3899F-P0210-S10	2	10	73.2	GT3899F-S36	0	36	157.8
GT3899F-P0310-S09	3	9	73.2	GT3899F-P0610-S30	6	30	157.8
GT3899F-P0610-S06	6	6	73.2	GT3899F-P1210-S24	12	24	157.8
GT3899F-P0810-S04	8	4	73.2	GT3899F-P3610	36	0	157.8
GT3899F-P1010-S02	10	2	73.2	GT3899F-S42	0	42	178.2
GT3899F-P1210	12	0	73.2	GT3899F-P0610-S36	6	36	178.2
GT3899F-S18	0	18	93.6	GT3899F-P1210-S30	12	30	178.2
GT3899F-P0210-S16	2	16	93.6	GT3899F-S48	0	48	198.6
GT3899F-P0410-S14	4	14	93.6	GT3899F-P0610-S42	6	42	198.6
GT3899F-P0610-S12	6	12	93.6	GT3899F-P0910-S39	9	39	198.6
GT3899F-P0810-S10	8	10	93.6	GT3899F-P1210-S36	12	36	198.6
GT3899F-P1010-S08	10	8	93.6	GT3899F-P1810-S30	18	30	198.6
GT3899F-P1210-S06	12	6	93.6	GT3899F-P2410-S24	24	24	198.6
GT3899F-P1410-S04	14	4	93.6	GT3899F-S60	0	60	242.4
GT3899F-P1610-S02	16	2	93.6	GT3899F-P0610-S54	6	54	242.4
GT3899F-P1810	18	0	93.6	GT3899F-P0810-S52	8	52	242.4
GT3899F-S24	0	24	114	GT3899F-P1010-S0	10	50	242.4

GT3899F-P0410-S20	4	20	114	GT3899F-P1210-S48	12	48	242.4
GT3899F-P0610-S18	6	18	114	GT3899F-S72	0	72	283.2

Note: N channels 10A rings parallel can be used as 1 channel N*10A current. For example: 2 rings 10A parallel could be used as 1 wires 20A. 10A,5A (signal) can combine freely in any way.It can be customized based on standard slip ring,please contact customer service for more detmails.

Specifications

Electrical Data		
Parameter	Value	
	Power	Signal
Rated Voltage	0~690VAC/VDC	0~440VAC/VDC
Insulation Resistance	≥1000MΩ/500VDC	≥1000MΩ/500VDC
Lead Wires	AWG16#Teflon	AWG22#Teflon
Lead Length	Standard 300mm(adjustable)	
Insulation Strength	1000VAC@50Hz , 60s	
Electrical Noise	<0.01Ω	
Mechanical Data		
Parameter	Value	
Working Life	100 Million Revs	
Rotating Speed	ID<60mm,1800RPM	
	60mm<ID<120mm,1200RPM	
	ID>120mm,800RPM	
Working Temperature	-30℃~80℃	
Operating Humidity	0~85% RH	
Contact Material	Precious Metal	
Housing Material	Aluminium Alloy	
Torque	0.1N.m ; +0.03N.m/6rings	
Protection Grade	IP51	

Lead Wires Color Code

Ring	1	2	3	4	5	6	7	8	9	10	11	12
Color	BLK	RED	YEL	GRN	BLU	WHT	BLK	RED	YEL	GRN	BLU	WHT

(6 wires for 1 group color, from 7-12, repeat the same color as 1...6, indicated with number code pipe)

Options For Custom Slip Ring

Note: Below special demands can be customized. According, the delivery date will be extended 3 to 15 days; also the cost will be increased 30% to 50%. Most of our basic parts are standard and modular, which can save the cost and lead time.

① Cable exit way and cable length can be customized for both rotor and stator.
② Because of the structure limitation, length/height/OD can be customized on your request.
③ Support current or signal up to 200 rings.
④ Aviation plug, terminal and heat-shrink tube are optional.
⑤ Hybrid slip ring for Yaskawa/Panasonic/Siemens servo control signal, power line and encoder line.
⑥ Support mixed high speed data transmission (including Ethernet, USB, RS232, RS485, Profibus, CanBUS, CANOPEN, DeviceNET, CC-LINK, ProfiNET, EtherCAT, etc.)
⑦ Can combine temperature control signal with thermocouple signal.
⑧ Special environment can be customized, such as quakeproof, high temperature, etc.
⑨ Hybrid Pneumatic/hydraulic and electric slip ring can be mixed.
⑩ High temperature can up to 500 degrees.
⑪ High pressure can up to 110KV
⑫ Rotating speed can up to 10000RPM
⑬ Maximum current can up to 5000 amperes.
⑭ Military grade
⑮ Optional for underwater IP65, IP68.
⑯ Optional for stainless steel housing

Technical support: technical@moflon.com

GT50119 Series

GT50119 series provides a 50mm through-bore for routing of hydraulic or pneumatic lines or hydraulic or pneumatic rotating shaft installation, and a compact 119mm outside diameter,features long life, fiber brush contact technology for ultimate performance in manychallenging applications.
GT50119 series are standard, off-the-shelf products, Color-coded lead wires are used onboth the stator and rotor for simplified electrical connections.It can transmit signal(2A), 10A, multiple 10A current when 360° degree free rotating.

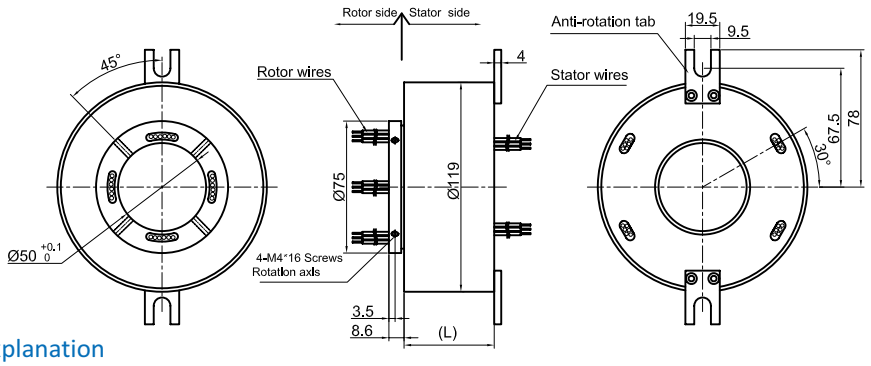

Part# Explanation

GT 50119 - P 06 10- S 06

- GT:through bore slip ring
- 50119:50-ID 50mm;119-OD 119mm
- p:power ring
- 0610:06-6rings;10-rated 10A/ring
- 06:6 rings
- S:signal(5A)

Part# List

GT50119 Series Parts# List							
Part#	10A	Signal or 5A	Length-L (mm)	Part#	10A	Signal or 5A	Length-L (mm)
GT50119-S02	0	2	43.6	GT50119-P0610-S24	6	24	150
GT50119-P0210	2	0	43.6	GT50119-P1210-S18	12	18	150
GT50119-S03	0	3	47.4	GT50119-P1810-S12	18	12	150
GT50119-P0310	3	0	47.4	GT50119-P2410-S06	24	6	150
GT50119-S06	0	6	58.8	GT50119-P3010	30	0	150
GT50119-P0210-S04	2	4	58.8	GT50119-S36	0	36	176.8
GT50119-P0410-S02	4	2	58.8	GT50119-P0610-S30	6	30	176.8
GT50119-P0610	6	0	58.8	GT50119-P1210-S24	12	24	176.8
GT50119-S12	0	12	81.6	GT50119-P3610	36	0	176.8
GT50119-P0210-S10	2	10	81.6	GT50119-S42	0	42	199.6
GT50119-P0310-S09	3	9	81.6	GT50119-P0610-S36	6	36	199.6
GT50119-P0610-S06	6	6	81.6	GT50119-P1210-S30	12	30	199.6
GT50119-P0810-S04	8	4	81.6	GT50119-S48	0	48	222.4
GT50119-P1010-S02	10	2	81.6	GT50119-P0610-S42	6	42	222.4
GT50119-P1210	12	0	81.6	GT50119-P0910-S39	9	39	222.4
GT50119-S18	0	18	104.4	GT50119-P1210-S36	12	36	222.4
GT50119-P0210-S16	2	16	104.4	GT50119-P1810-S30	18	30	222.4
GT50119-P0410-S14	4	14	104.4	GT50119-P2410-S24	24	24	222.4
GT50119-P0610-S12	6	12	104.4	GT50119-S60	0	60	273
GT50119-P0810-S10	8	10	104.4	GT50119-P0610-S54	6	54	273
GT50119-P1010-S08	10	8	104.4	GT50119-P0910-S51	9	51	273
GT50119-P1210-S06	12	6	104.4	GT50119-P1210-S48	12	48	273
GT50119-P1410-S04	14	4	104.4	GT50119-S72	0	72	273
GT50119-P1610-S02	16	2	104.4	GT50119-P0610-S66	6	66	319
GT50119-P1810	18	0	104.4	GT50119-P1210-S60	12	60	319
GT50119-S24	0	24	127.2	GT50119-P2410-S48	24	48	319
GT50119-P0410-S20	4	20	127.2	GT50119-P3610-S36	36	36	319
GT50119-P0610-S18	6	18	127.2	GT50119-S84	0	84	373
GT50119-P1210-S12	12	12	127.2	GT50119-P1210-S72	12	72	373
GT50119-P1810-S06	18	6	127.2	GT50119-P2410-S60	24	60	373
GT50119-P2410	24	0	127.2	GT50119-P3610-S48	36	48	373
GT50119-S30	0	30	150	GT50119-S96	0	96	419

Note: N channels 10A rings parallel can be used as 1 channel N*10A current. For example: 2 rings 10A parallel could be used as 1 wires 20A. 10A,5A (signal) can combine freely in any way.It can be customized based on standard slip ring,please contact customer service for more detmails.

Specifications

Electrical Data		
Parameter	Value	
	Power	Signal
Rated Voltage	0~690VAC/VDC	0~440VAC/VDC
Insulation Resistance	≥1000MΩ/500VDC	≥1000MΩ/500VDC
Lead Wires	AWG16#Teflon	AWG22#Teflon
Lead Length	Standard 300mm(adjustable)	
Insulation Strength	1000VAC@50Hz , 60s	
Electrical Noise	<0.01Ω	
Mechanical Data		
Parameter	Value	
Working Life	100 Million Revs	
Rotating Speed	ID<60mm,1800RPM	
	60mm<ID<120mm,1200RPM	
	ID>120mm,800RPM	
Working Temperature	-30℃~80℃	
Operating Humidity	0~85% RH	
Contact Material	Precious Metal	
Housing Material	Aluminium Alloy	
Torque	0.1N.m ; +0.03N.m/6rings	
Protection Grade	IP51	

Lead Wires Color Code

Ring	1	2	3	4	5	6	7	8	9	10	11	12
Color	BLK	RED	YEL	GRN	BLU	WHT	BLK	RED	YEL	GRN	BLU	WHT

(6 wires for 1 group color, from 7-12, repeat the same color as 1...6, indicated with number code pipe)

Options For Custom Slip Ring

Note: Below special demands can be customized. According, the delivery date will be extended 3 to 15 days; also the cost will be increased 30% to 50%. Most of our basic parts are standard and modular, which can save the cost and lead time.

① Cable exit way and cable length can be customized for both rotor and stator.
② Because of the structure limitation, length/height/OD can be customized on your request.
③ Support current or signal up to 200 rings.
④ Aviation plug, terminal and heat-shrink tube are optional.
⑤ Hybrid slip ring for Yaskawa/Panasonic/Siemens servo control signal, power line and encoder line.
⑥ Support mixed high speed data transmission (including Ethernet, USB, RS232, RS485, Profibus, CanBUS, CANOPEN, DeviceNET, CC-LINK, ProfiNET, EtherCAT, etc.)
⑦ Can combine temperature control signal with thermocouple signal.
⑧ Special environment can be customized, such as quakeproof, high temperature, etc.
⑨ Hybrid Pneumatic/hydraulic and electric slip ring can be mixed.
⑩ High temperature can up to 500 degrees.
⑪ High pressure can up to 110KV
⑫ Rotating speed can up to 10000RPM
⑬ Maximum current can up to 5000 amperes.
⑭ Military grade
⑮ Optional for underwater IP65, IP68.
⑯ Optional for stainless steel housing

Technical support: technical@moflon.com

GT50119F Series

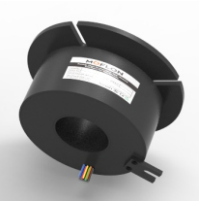

GT50119F series provides a 50mm through-bore for routing of hydraulic or pneumatic lines or hydraulic or pneumatic rotating shaft installation, and a compact 119mm outside diameter,features long life, fiber brush contact technology for ultimate performance in manychallenging applications. GT50119F series are standard, off-the-shelf products, Color-coded lead wires are used onboth the stator and rotor for simplified electrical connections.It can transmit signal(2A), 10A, multiple 10A current when 360° degree free rotating.

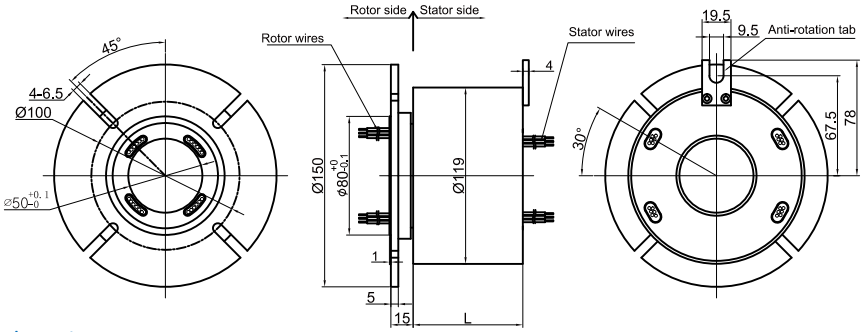

Part# Explanation

GT 50119F - P 06 10- S 06

- GT:through bore slip ring
- 50119:50-ID 50mm;119-OD 119mm
- F:with rotor flange style
- P:power ring
- 0610:06-6rings;10-rated 10A/ring
- 06:6 rings
- S:signal(5A)

Part# List

GT50119F Series Parts# List							
Part#	10A	Signal or 5A	Length-L (mm)	Part#	10A	Signal or 5A	Length-L (mm)
GT50119F-S02	0	2	43.6	GT50119F-P0610-S24	6	24	150
GT50119F-P0210	2	0	43.6	GT50119F-P1210-S18	12	18	150
GT50119F-S03	0	3	47.4	GT50119F-P1810-S12	18	12	150
GT50119F-P0310	3	0	47.4	GT50119F-P2410-S06	24	6	150
GT50119F-S06	0	6	58.8	GT50119F-P3010	30	0	150
GT50119F-P0210-S04	2	4	58.8	GT50119F-S36	0	36	176.8
GT50119F-P0410-S02	4	2	58.8	GT50119F-P0610-S30	6	30	176.8
GT50119F-P0610	6	0	58.8	GT50119F-P1210-S24	12	24	176.8
GT50119F-S12	0	12	81.6	GT50119F-P3610	36	0	176.8
GT50119F-P0210-S10	2	10	81.6	GT50119F-S42	0	42	199.6
GT50119F-P0310-S09	3	9	81.6	GT50119F-P0610-S36	6	36	199.6
GT50119F-P0610-S06	6	6	81.6	GT50119F-P1210-S30	12	30	199.6
GT50119F-P0810-S04	8	4	81.6	GT50119F-S48	0	48	222.4
GT50119F-P1010-S02	10	2	81.6	GT50119F-P0610-S42	6	42	222.4
GT50119F-P1210	12	0	81.6	GT50119F-P0910-S39	9	39	222.4
GT50119F-S18	0	18	104.4	GT50119F-P1210-S36	12	36	222.4
GT50119F-P0210-S16	2	16	104.4	GT50119F-P1810-S30	18	30	222.4
GT50119F-P0410-S14	4	14	104.4	GT50119F-P2410-S24	24	24	222.4
GT50119F-P0610-S12	6	12	104.4	GT50119F-S60	0	60	273
GT50119F-P0810-S10	8	10	104.4	GT50119F-P0610-S54	6	54	273
GT50119F-P1010-S08	10	8	104.4	GT50119F-P0910-S51	9	51	273
GT50119F-P1210-S06	12	6	104.4	GT50119F-P1210-S48	12	48	273
GT50119F-P1410-S04	14	4	104.4	GT50119F-S72	0	72	273
GT50119F-P1610-S02	16	2	104.4	GT50119F-P0610-S66	6	66	319
GT50119F-P1810	18	0	104.4	GT50119F-P1210-S60	12	60	319
GT50119F-S24	0	24	127.2	GT50119F-P2410-S48	24	48	319
GT50119F-P0410-S20	4	20	127.2	GT50119F-P3610-S36	36	36	319
GT50119F-P0610-S18	6	18	127.2	GT50119F-S84	0	84	373
GT50119F-P1210-S12	12	12	127.2	GT50119F-P1210-S72	12	72	373
GT50119F-P1810-S06	18	6	127.2	GT50119F-P2410-S60	24	60	373
GT50119F-P2410	24	0	127.2	GT50119F-P3610-S48	36	48	373
GT50119F-S30	0	30	150	GT50119F-S96	0	96	419

Note: N channels 10A rings parallel can be used as 1 channel N*10A current. For example: 2 rings 10A parallel could be used as 1 wires 20A. 10A,5A (signal) can combine freely in any way.It can be customized based on standard slip ring,please contact customer service for more detmails.

Specifications

Electrical Data		
Parameter	Value	
	Power	Signal
Rated Voltage	0~690VAC/VDC	0~440VAC/VDC
Insulation Resistance	≥1000MΩ/500VDC	≥1000MΩ/500VDC
Lead Wires	AWG16#Teflon	AWG22#Teflon
Lead Length	Standard 300mm(adjustable)	
Insulation Strength	1000VAC@50Hz , 60s	
Electrical Noise	<0.01Ω	
Mechanical Data		
Parameter	Value	
Working Life	100 Million Revs	
Rotating Speed	ID<60mm,1800RPM	
	60mm<ID<120mm,1200RPM	
	ID>120mm,800RPM	
Working Temperature	-30℃~80℃	
Operating Humidity	0~85% RH	
Contact Material	Precious Metal	
Housing Material	Aluminium Alloy	
Torque	0.1N.m ; +0.03N.m/6rings	
Protection Grade	IP51	

Lead Wires Color Code

Ring	1	2	3	4	5	6	7	8	9	10	11	12
Color	BLK	RED	YEL	GRN	BLU	WHT	BLK	RED	YEL	GRN	BLU	WHT

(6 wires for 1 group color, from 7-12, repeat the same color as 1...6, indicated with number code pipe)

Options For Custom Slip Ring

Note: Below special demands can be customized. According, the delivery date will be extended 3 to 15 days; also the cost will be increased 30% to 50%. Most of our basic parts are standard and modular, which can save the cost and lead time.

① Cable exit way and cable length can be customized for both rotor and stator.
② Because of the structure limitation, length/height/OD can be customized on your request.
③ Support current or signal up to 200 rings.
④ Aviation plug, terminal and heat-shrink tube are optional.
⑤ Hybrid slip ring for Yaskawa/Panasonic/Siemens servo control signal, power line and encoder line.
⑥ Support mixed high speed data transmission (including Ethernet, USB, RS232, RS485, Profibus, CanBUS, CANOPEN, DeviceNET, CC-LINK, ProfiNET, EtherCAT, etc.)
⑦ Can combine temperature control signal with thermocouple signal.
⑧ Special environment can be customized, such as quakeproof, high temperature, etc.
⑨ Hybrid Pneumatic/hydraulic and electric slip ring can be mixed.
⑩ High temperature can up to 500 degrees.
⑪ High pressure can up to 110KV
⑫ Rotating speed can up to 10000RPM
⑬ Maximum current can up to 5000 amperes.
⑭ Military grade
⑮ Optional for underwater IP65, IP68.
⑯ Optional for stainless steel housing

Technical support: technical@moflon.com

GT50130 Series

GT50130 series provides a 50mm through-bore for routing of hydraulic or pneumatic lines or hydraulic or pneumatic rotating shaft installation, and a compact 130mm outside diameter,features long life, fiber brush contact technology for ultimate performance in manychallenging applications.
GT50130 series are standard, off-the-shelf products, Color-coded lead wires are used onboth the stator and rotor for simplified electrical connections.It can transmit signal(2A), 10A, multiple 10A current when 360° degree free rotating.

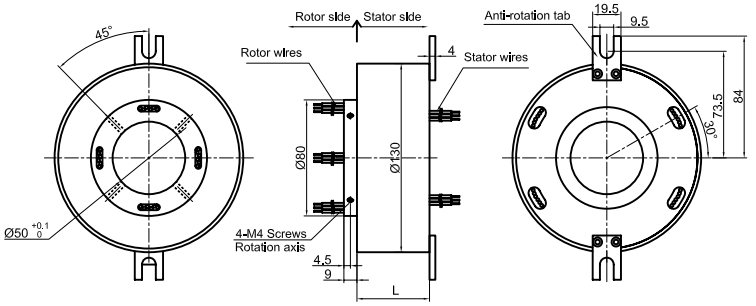

Part# Explanation

GT 50130 - P 06 10- S 06

- GT:through bore slip ring
- 50130:50-ID 50mm;130-OD 130mm
- P:power ring
- 0610:06-6rings;10-rated 10A/ring
- 06:6 rings
- S:signal(5A)

Part# List

GT50130 Series Parts# List							
Part#	10A	Signal or 5A	Length-L (mm)	Part#	10A	Signal or 5A	Length-L (mm)
GT50130-S02	0	2	43.6	GT50130-S48	0	48	215.2
GT50130-P0210	2	0	43.6	GT50130-P0610-S42	6	42	215.2
GT50130-S03	0	3	47.2	GT50130-P0910-S39	9	39	215.2
GT50130-P0310	3	0	47.2	GT50130-P1210-S36	12	36	215.2
GT50130-S06	0	6	58	GT50130-P1810-S30	18	30	215.2
GT50130-P0210-S04	2	4	58	GT50130-P2410-S24	24	24	215.2
GT50130-P0410-S02	4	2	58	GT50130-S60	0	60	258.4
GT50130-P0610	6	0	58	GT50130-P0610-S54	6	54	258.4
GT50130-S12	0	12	79.6	GT50130-P0910-S51	9	51	258.4
GT50130-P0210-S10	2	10	79.6	GT50130-P1210-S48	12	48	258.4
GT50130-P0310-S09	3	9	79.6	GT50130-S72	0	72	301.6
GT50130-P0610-S06	6	6	79.6	GT50130-P0610-S66	6	66	301.6
GT50130-P0810-S04	8	4	79.6	GT50130-P1210-S60	12	60	301.6
GT50130-P1010-S02	10	2	79.6	GT50130-P2410-S48	24	48	301.6
GT50130-P1210	12	0	79.6	GT50130-P3610-S36	36	36	301.6
GT50130-S18	0	18	101.2	GT50130-S84	0	84	348.8
GT50130-P0210-S16	2	16	101.2	GT50130-P1210-S72	12	72	348.8
GT50130-P0410-S14	4	14	101.2	GT50130-P2410-S60	24	60	348.8
GT50130-P0610-S12	6	12	101.2	GT50130-P3610-S48	36	48	348.8
GT50130-P0810-S10	8	10	101.2	GT50130-S96	0	96	392
GT50130-P1010-S08	10	8	101.2	GT50130-P1210-S84	12	84	392
GT50130-P1210-S06	12	6	101.2	GT50130-P2410-S72	24	72	392
GT50130-P1410-S04	14	4	101.2	GT50130-P3610-S60	36	60	392
GT50130-P1610-S02	16	2	101.2	GT50130-P4210-S54	42	54	392
GT50130-S24	0	24	122.8	GT50130-S108	0	108	441.2
GT50130-P0410-S20	4	20	122.8	GT50130-P1210-S96	12	96	441.2
GT50130-P0610-S18	6	18	122.8	GT50130-P2410-S84	24	84	441.2
GT50130-P1210-S12	12	12	122.8	GT50130-P3610-S72	36	72	441.2
GT50130-P1810-S06	18	6	122.8	GT50130-S120	0	120	484.8
GT50130-P2410	24	0	122.8	GT50130-P1210-S108	12	108	484.8
GT50130-S30	0	30	144.4	GT50130-P2410-S96	24	96	484.8
GT50130-P0610-S24	6	24	144.4	GT50130-P3610-S84	36	84	484.8
GT50130-P1210-S18	12	18	144.4	GT50130-P4810-S72	48	72	484.8
GT50130-P1810-S12	18	12	144.4	GT50130-S132	0	132	527.6
GT50130-P2410-S06	24	6	144.4	GT50130-P1210-S120	12	120	527.6
GT50130-P3010	30	0	144.4	GT50130-P2410-S108	24	108	527.6

GT50130-S36	0	36	170	GT50130-P3610-S96	36	96	527.6
GT50130-P0610-S30	6	30	170	GT50130-P4810-S84	48	84	527.6
GT50130-P1210-S24	12	24	170	GT50130-S144	0	144	570.8
GT50130-P3610	36	0	170	GT50130-P1210-S132	12	132	570.8
GT50130-S42	0	42	193.6	GT50130-P2410-S120	24	120	570.8
GT50130-P0610-S36	6	36	193.6	GT50130-P3610-S108	36	108	570.8
GT50130-P1210-S30	12	30	193.6	GT50130-P4810-S96	48	96	570.8

Note: N channels 10A rings parallel can be used as 1 channel N*10A current. For example: 2 rings 10A parallel could be used as 1 wires 20A. 10A,5A (signal) can combine freely in any way.It can be customized based on standard slip ring,please contact customer service for more detmails.

Specifications

Electrical Data		
Parameter	Value	
	Power	Signal
Rated Voltage	0~690VAC/VDC	0~440VAC/VDC
Insulation Resistance	≥1000MΩ/500VDC	≥1000MΩ/500VDC
Lead Wires	AWG16#Teflon	AWG22#Teflon
Lead Length	Standard 300mm(adjustable)	
Insulation Strength	1000VAC@50Hz，60s	
Electrical Noise	<0.01Ω	
Mechanical Data		
Parameter	Value	
Working Life	100 Million Revs	
Rotating Speed	ID<60mm,1800RPM	
	60mm<ID<120mm,1200RPM	
	ID>120mm,800RPM	
Working Temperature	-30℃~80℃	
Operating Humidity	0~85% RH	
Contact Material	Precious Metal	
Housing Material	Aluminium Alloy	
Torque	0.1N.m；+0.03N.m/6rings	
Protection Grade	IP51	

Lead Wires Color Code

Ring	1	2	3	4	5	6	7	8	9	10	11	12
Color	BLK	RED	YEL	GRN	BLU	WHT	BLK	RED	YEL	GRN	BLU	WHT

(6 wires for 1 group color, from 7-12, repeat the same color as 1...6, indicated with number code pipe)

Options For Custom Slip Ring

Note: Below special demands can be customized. According, the delivery date will be extended 3 to 15 days; also the cost will be increased 30% to 50%. Most of our basic parts are standard and modular, which can save the cost and lead time.

① Cable exit way and cable length can be customized for both rotor and stator.
② Because of the structure limitation, length/height/OD can be customized on your request.
③ Support current or signal up to 200 rings.
④ Aviation plug, terminal and heat-shrink tube are optional.
⑤ Hybrid slip ring for Yaskawa/Panasonic/Siemens servo control signal, power line and encoder line.
⑥ Support mixed high speed data transmission (including Ethernet, USB, RS232, RS485, Profibus, CanBUS, CANOPEN, DeviceNET, CC-LINK, ProfiNET, EtherCAT, etc.)
⑦ Can combine temperature control signal with thermocouple signal.
⑧ Special environment can be customized, such as quakeproof, high temperature, etc.
⑨ Hybrid Pneumatic/hydraulic and electric slip ring can be mixed.
⑩ High temperature can up to 500 degrees.
⑪ High pressure can up to 110KV
⑫ Rotating speed can up to 10000RPM
⑬ Maximum current can up to 5000 amperes.
⑭ Military grade
⑮ Optional for underwater IP65, IP68.
⑯ Optional for stainless steel housing

Technical support: technical@moflon.com

GT60130 Series

GT60130 series provides a 60mm through-bore for routing of hydraulic or pneumatic lines or hydraulic or pneumatic rotating shaft installation, and a compact 130mm outside diameter,features long life, fiber brush contact technology for ultimate performance in manychallenging applications.
GT60130 series are standard, off-the-shelf products, Color-coded lead wires are used onboth the stator and rotor for simplified electrical connections.It can transmit signal(2A), 10A, multiple 10A current when 360° degree free rotating.

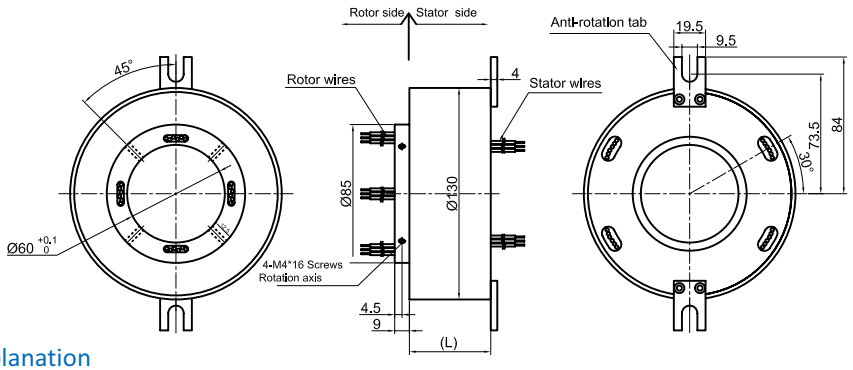

Part# Explanation

GT 60130 - P 06 10- S 06

- GT:through bore slip ring
- 60130:60-ID 60mm;130-OD 130mm
- P:power ring
- 0610:06-6rings;10-rated 10A/ring
- 06:6 rings
- S:signal(5A)

Part# List

GT60130 Series Parts# List							
Part#	10A	Signal or 5A	Length-L (mm)	Part#	10A	Signal or 5A	Length-L (mm)
GT60130-S02	0	2	43.6	GT60130-S48	0	48	215.2
GT60130-P0210	2	0	43.6	GT60130-P0610-S42	6	42	215.2
GT60130-S03	0	3	47.2	GT60130-P0910-S39	9	39	215.2
GT60130-P0310	3	0	47.2	GT60130-P1210-S36	12	36	215.2
GT60130-S06	0	6	58	GT60130-P1810-S30	18	30	215.2
GT60130-P0210-S04	2	4	58	GT60130-P2410-S24	24	24	215.2
GT60130-P0410-S02	4	2	58	GT60130-S60	0	60	258.4
GT60130-P0610	6	0	58	GT60130-P0610-S54	6	54	258.4
GT60130-S12	0	12	79.6	GT60130-P0910-S51	9	51	258.4
GT60130-P0210-S10	2	10	79.6	GT60130-P1210-S48	12	48	258.4
GT60130-P0310-S09	3	9	79.6	GT60130-S72	0	72	301.6
GT60130-P0610-S06	6	6	79.6	GT60130-P0610-S66	6	66	301.6
GT60130-P0810-S04	8	4	79.6	GT60130-P1210-S60	12	60	301.6
GT60130-P1010-S02	10	2	79.6	GT60130-P2410-S48	24	48	301.6
GT60130-P1210	12	0	79.6	GT60130-P3610-S36	36	36	301.6
GT60130-S18	0	18	101.2	GT60130-S84	0	84	348.8
GT60130-P0210-S16	2	16	101.2	GT60130-P1210-S72	12	72	348.8
GT60130-P0410-S14	4	14	101.2	GT60130-P2410-S60	24	60	348.8
GT60130-P0610-S12	6	12	101.2	GT60130-P3610-S48	36	48	348.8
GT60130-P0810-S10	8	10	101.2	GT60130-S96	0	96	392
GT60130-P1010-S08	10	8	101.2	GT60130-P1210-S84	12	84	392
GT60130-P1210-S06	12	6	101.2	GT60130-P2410-S72	24	72	392
GT60130-P1410-S04	14	4	101.2	GT60130-P3610-S60	36	60	392
GT60130-P1610-S02	16	2	101.2	GT60130-P4210-S54	42	54	392
GT60130-S24	0	24	122.8	GT60130-S108	0	108	441.2
GT60130-P0410-S20	4	20	122.8	GT60130-P1210-S96	12	96	441.2
GT60130-P0610-S18	6	18	122.8	GT60130-P2410-S84	24	84	441.2
GT60130-P1210-S12	12	12	122.8	GT60130-P3610-S72	36	72	441.2
GT60130-P1810-S06	18	6	122.8	GT60130-S120	48	60	484.8
GT60130-P2410	24	0	122.8	GT60130-P1210-S108	12	108	484.8
GT60130-S30	0	30	144.4	GT60130-P2410-S96	24	96	484.8
GT60130-P0610-S24	6	24	144.4	GT60130-P3610-S84	36	84	484.8
GT60130-P1210-S18	12	18	144.4	GT60130-P4810-S72	48	72	484.8
GT60130-P1810-S12	18	12	144.4	GT60130-S132	0	132	527.6
GT60130-P2410-S06	24	6	144.4	GT60130-P1210-S120	12	120	527.6
GT60130-P3010	30	0	144.4	GT60130-P2410-S108	24	108	527.6

GT60130-S36	0	36	170	GT60130-P3610-S96	36	96	527.6
GT60130-P0610-S30	6	30	170	GT60130-P4810-S84	48	84	527.6
GT60130-P1210-S24	12	24	170	GT60130-S144	0	144	570.8
GT60130-P3610	36	0	170	GT60130-P1210-S132	12	132	570.8
GT60130-S42	0	42	193.6	GT60130-P2410-S120	24	120	570.8
GT60130-P0610-S36	6	36	193.6	GT60130-P3610-S108	36	108	570.8
GT60130-P1210-S30	12	30	193.6	GT60130-P4810-S96	48	96	570.8

Note: N channels 10A rings parallel can be used as 1 channel N*10A current. For example: 2 rings 10A parallel could be used as 1 wires 20A. 10A,5A (signal) can combine freely in any way.It can be customized based on standard slip ring,please contact customer service for more detmails.

Specifications

Electrical Data		
Parameter	Value	
	Power	Signal
Rated Voltage	0~690VAC/VDC	0~440VAC/VDC
Insulation Resistance	≥1000MΩ/500VDC	≥1000MΩ/500VDC
Lead Wires	AWG16#Teflon	AWG22#Teflon
Lead Length	Standard 300mm(adjustable)	
Insulation Strength	1000VAC@50Hz , 60s	
Electrical Noise	<0.01Ω	
Mechanical Data		
Parameter	Value	
Working Life	100 Million Revs	
Rotating Speed	ID<60mm,1800RPM	
	60mm<ID<120mm,1200RPM	
	ID>120mm,800RPM	
Working Temperature	-30℃~80℃	
Operating Humidity	0~85% RH	
Contact Material	Precious Metal	
Housing Material	Aluminium Alloy	
Torque	0.1N.m ; +0.03N.m/6rings	
Protection Grade	IP51	

Lead Wires Color Code

Ring	1	2	3	4	5	6	7	8	9	10	11	12
Color	BLK	RED	YEL	GRN	BLU	WHT	BLK	RED	YEL	GRN	BLU	WHT

(6 wires for 1 group color, from 7-12, repeat the same color as 1...6, indicated with number code pipe)

Options For Custom Slip Ring

Note: Below special demands can be customized. According, the delivery date will be extended 3 to 15 days; also the cost will be increased 30% to 50%. Most of our basic parts are standard and modular, which can save the cost and lead time.

① Cable exit way and cable length can be customized for both rotor and stator.
② Because of the structure limitation, length/height/OD can be customized on your request.
③ Support current or signal up to 200 rings.
④ Aviation plug, terminal and heat-shrink tube are optional.
⑤ Hybrid slip ring for Yaskawa/Panasonic/Siemens servo control signal, power line and encoder line.
⑥ Support mixed high speed data transmission (including Ethernet, USB, RS232, RS485, Profibus, CanBUS, CANOPEN, DeviceNET, CC-LINK, ProfiNET, EtherCAT, etc.)
⑦ Can combine temperature control signal with thermocouple signal.
⑧ Special environment can be customized, such as quakeproof, high temperature, etc.
⑨ Hybrid Pneumatic/hydraulic and electric slip ring can be mixed.
⑩ High temperature can up to 500 degrees.
⑪ High pressure can up to 110KV
⑫ Rotating speed can up to 10000RPM
⑬ Maximum current can up to 5000 amperes.
⑭ Military grade
⑮ Optional for underwater IP65, IP68.
⑯ Optional for stainless steel housing

Technical support: technical@moflon.com

GT70158 Series

GT70158 series provides a 70mm through-bore for routing of hydraulic or pneumatic lines or hydraulic or pneumatic rotating shaft installation, and a compact 158mm outside diameter,features long life, fiber brush contact technology for ultimate performance in manychallenging applications.
GT70158 series are standard, off-the-shelf products, Color-coded lead wires are used onboth the stator and rotor for simplified electrical connections.It can transmit signal(2A), 10A, multiple 10A current when 360° degree free rotating.

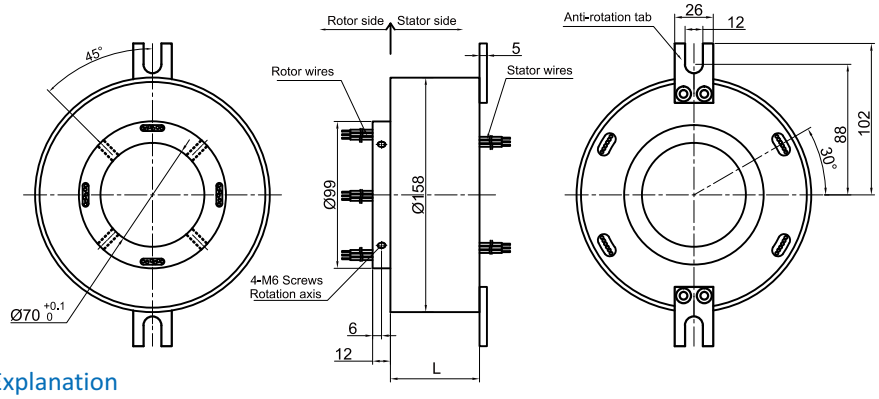

Part# Explanation

GT 70158 - P 06 10- S 06

- GT:through bore slip ring
- 70158:70-ID 70mm;158-OD 158mm
- P:power ring
- 0610:06-6rings;10-rated 10A/ring
- 06:6 rings
- S:signal(5A)

Part# List

GT70158 Series Parts# List							
Part#	10A	Signal or 5A	Length-L (mm)	Part#	10A	Signal or 5A	Length-L (mm)
GT70158-S02	0	2	55.6	GT70158-S36	0	36	182
GT70158-P0210	2	0	55.6	GT70158-P0610-S30	6	30	182
GT70158-S03	0	3	59.2	GT70158-P1210-S24	12	24	182
GT70158-P0310	3	0	59.2	GT70158-P3610	36	0	182
GT70158-S06	0	6	70	GT70158-S42	0	42	205.2
GT70158-P0210-S04	2	4	70	GT70158-P0610-S36	6	36	205.2
GT70158-P0410-S02	4	2	70	GT70158-P1210-S30	12	30	205.2
GT70158-P0610	6	0	70	GT70158-S48	0	48	226.8
GT70158-S12	0	12	91.6	GT70158-P0610-S42	6	42	226.8
GT70158-P0210-S10	2	10	91.6	GT70158-P0910-S39	9	39	226.8
GT70158-P0310-S09	3	9	91.6	GT70158-P1210-S36	12	36	226.8
GT70158-P0610-S06	6	6	91.6	GT70158-P1810-S30	18	30	226.8
GT70158-P0810-S04	8	4	91.6	GT70158-P2410-S24	24	24	226.8
GT70158-P1010-S02	10	2	91.6	GT70158-S60	0	60	270
GT70158-P1210	12	0	91.6	GT70158-P0610-S54	6	54	270
GT70158-S18	0	18	113.2	GT70158-P0910-S51	9	51	270
GT70158-P0210-S16	2	16	113.2	GT70158-P1210-S48	12	48	270
GT70158-P0410-S14	4	14	113.2	GT70158-S72	0	72	317.2
GT70158-P0610-S12	6	12	113.2	GT70158-P0610-S66	6	66	317.2
GT70158-P0810-S10	8	10	113.2	GT70158-P1210-S60	12	60	317.2
GT70158-P1010-S08	10	8	113.2	GT70158-P2410-S48	24	48	317.2
GT70158-P1210-S06	12	6	113.2	GT70158-P3610-S36	36	36	317.2
GT70158-P1410-S04	14	4	113.2	GT70158-S84	0	84	360.4
GT70158-P1610-S02	16	2	113.2	GT70158-P1210-S72	12	72	360.4
GT70158-S24	0	24	134.8	GT70158-P2410-S60	24	60	360.4
GT70158-P0410-S20	4	20	134.8	GT70158-P3610-S48	36	48	360.4
GT70158-P0610-S18	6	18	134.8	GT70158-S96	0	96	407.6
GT70158-P1210-S12	12	12	134.8	GT70158-P1210-S84	12	84	407.6
GT70158-P1810-S06	18	6	134.8	GT70158-P2410-S72	24	72	407.6
GT70158-P2410	24	0	134.8	GT70158-P3610-S60	36	60	407.6
GT70158-S30	0	30	156.4	GT70158-P4210-S54	42	54	407.6
GT70158-P0610-S24	6	24	156.4	GT70158-S108	0	108	450.8
GT70158-P1210-S18	12	18	156.4	GT70158-P1210-S96	12	96	450.8
GT70158-P1810-S12	18	12	156.4	GT70158-P2410-S84	24	84	450.8
GT70158-P2410-S06	24	6	156.4	GT70158-P3610-S72	36	72	450.8
GT70158-P3010	30	0	156.4	GT70158-P4810-S60	48	60	450.8

Note: N channels 10A rings parallel can be used as 1 channel N*10A current. For example: 2 rings 10A parallel could be used as 1 wires 20A. 10A,5A (signal) can combine freely in any way.It can be customized based on standard slip ring,please contact customer service for more detmails.

Specifications

Electrical Data		
Parameter	Value	
	Power	Signal
Rated Voltage	0~690VAC/VDC	0~440VAC/VDC
Insulation Resistance	≥1000MΩ/500VDC	≥1000MΩ/500VDC
Lead Wires	AWG16#Teflon	AWG22#Teflon
Lead Length	Standard 300mm(adjustable)	
Insulation Strength	1000VAC@50Hz , 60s	
Electrical Noise	<0.01Ω	

Mechanical Data	
Parameter	Value
Working Life	100 Million Revs
Rotating Speed	ID<60mm,1800RPM
	60mm<ID<120mm,1200RPM
	ID>120mm,800RPM
Working Temperature	-30℃~80℃
Operating Humidity	0~85% RH
Contact Material	Precious Metal
Housing Material	Aluminium Alloy
Torque	0.1N.m ; +0.03N.m/6rings
Protection Grade	IP51

Lead Wires Color Code

Ring	1	2	3	4	5	6	7	8	9	10	11	12
Color	BLK	RED	YEL	GRN	BLU	WHT	BLK	RED	YEL	GRN	BLU	WHT

(6 wires for 1 group color, from 7-12, repeat the same color as 1...6, indicated with number code pipe)

Options For Custom Slip Ring

Note: Below special demands can be customized. According, the delivery date will be extended 3 to 15 days; also the cost will be increased 30% to 50%. Most of our basic parts are standard and modular, which can save the cost and lead time.

① Cable exit way and cable length can be customized for both rotor and stator.
② Because of the structure limitation, length/height/OD can be customized on your request.
③ Support current or signal up to 200 rings.
④ Aviation plug, terminal and heat-shrink tube are optional.
⑤ Hybrid slip ring for Yaskawa/Panasonic/Siemens servo control signal, power line and encoder line.
⑥ Support mixed high speed data transmission (including Ethernet, USB, RS232, RS485, Profibus, CanBUS, CANOPEN, DeviceNET, CC-LINK, ProfiNET, EtherCAT, etc.)
⑦ Can combine temperature control signal with thermocouple signal.
⑧ Special environment can be customized, such as quakeproof, high temperature, etc.
⑨ Hybrid Pneumatic/hydraulic and electric slip ring can be mixed.
⑩ High temperature can up to 500 degrees.
⑪ High pressure can up to 110KV
⑫ Rotating speed can up to 10000RPM
⑬ Maximum current can up to 5000 amperes.
⑭ Military grade
⑮ Optional for underwater IP65, IP68.
⑯ Optional for stainless steel housing

Technical support: technical@moflon.com

GT80158 Series

GT80158 series provides a 80mm through-bore for routing of hydraulic or pneumatic lines or hydraulic or pneumatic rotating shaft installation, and a compact 158mm outside diameter,features long life, fiber brush contact technology for ultimate performance in manychallenging applications.
GT80158 series are standard, off-the-shelf products, Color-coded lead wires are used onboth the stator and rotor for simplified electrical connections.It can transmit signal(2A), 10A, multiple 10A current when 360° degree free rotating.

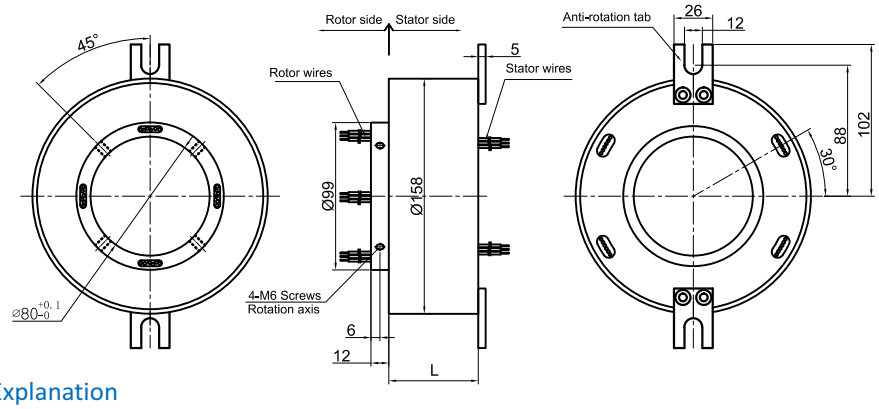

Part# Explanation

GT 80158 - P 06 10- S 06

- GT:through bore slip ring
- 80158:80-ID 80mm;158-OD 158mm
- P:power ring
- 0610:06-6rings;10-rated 10A/ring
- 06:6 rings
- S:signal(5A)

Part# List

GT80158 Series Parts# List							
Part#	10A	Signal or 5A	Length-L (mm)	Part#	10A	Signal or 5A	Length-L (mm)
GT80158-S02	0	2	55.6	GT80158-S36	0	36	182
GT80158-P0210	2	0	55.6	GT80158-P0610-S30	6	30	182
GT80158-S03	0	3	59.2	GT80158-P1210-S24	12	24	182
GT80158-P0310	3	0	59.2	GT80158-P3610	36	0	182
GT80158-S06	0	6	70	GT80158-S42	0	42	205.2
GT80158-P0210-S04	2	4	70	GT80158-P0610-S36	6	36	205.2
GT80158-P0410-S02	4	2	70	GT80158-P1210-S30	12	30	205.2
GT80158-P0610	6	0	70	GT80158-S48	0	48	226.8
GT80158-S12	0	12	91.6	GT80158-P0610-S42	6	42	226.8
GT80158-P0210-S10	2	10	91.6	GT80158-P0910-S39	9	39	226.8
GT80158-P0310-S09	3	9	91.6	GT80158-P1210-S36	12	36	226.8
GT80158-P0610-S06	6	6	91.6	GT80158-P1810-S30	18	30	226.8
GT80158-P0810-S04	8	4	91.6	GT80158-P2410-S24	24	24	226.8
GT80158-P1010-S02	10	2	91.6	GT80158-S60	0	60	270
GT80158-P1210	12	0	91.6	GT80158-P0610-S54	6	54	270
GT80158-S18	0	18	113.2	GT80158-P0910-S51	9	51	270
GT80158-P0210-S16	2	16	113.2	GT80158-P1210-S48	12	48	270
GT80158-P0410-S14	4	14	113.2	GT80158-S72	0	72	317.2
GT80158-P0610-S12	6	12	113.2	GT80158-P0610-S66	6	66	317.2
GT80158-P0810-S10	8	10	113.2	GT80158-P1210-S60	12	60	317.2
GT80158-P1010-S08	10	8	113.2	GT80158-P2410-S48	24	48	317.2
GT80158-P1210-S06	12	6	113.2	GT80158-P3610-S36	36	36	317.2
GT80158-P1410-S04	14	4	113.2	GT80158-S84	0	84	360.4
GT80158-P1610-S02	16	2	113.2	GT80158-P1210-S72	12	72	360.4
GT80158-S24	0	24	134.8	GT80158-P2410-S60	24	60	360.4
GT80158-P0410-S20	4	20	134.8	GT80158-P3610-S48	36	48	360.4
GT80158-P0610-S18	6	18	134.8	GT80158-S96	0	96	407.6
GT80158-P1210-S12	12	12	134.8	GT80158-P1210-S84	12	84	407.6
GT80158-P1810-S06	18	6	134.8	GT80158-P2410-S72	24	72	407.6
GT80158-P2410	24	0	134.8	GT80158-P3610-S60	36	60	407.6
GT80158-S30	0	30	156.4	GT80158-P4210-S54	42	54	407.6
GT80158-P0610-S24	6	24	156.4	GT80158-S108	0	108	450.8
GT80158-P1210-S18	12	18	156.4	GT80158-P1210-S96	12	96	450.8
GT80158-P1810-S12	18	12	156.4	GT80158-P2410-S84	24	84	450.8
GT80158-P2410-S06	24	6	156.4	GT80158-P3610-S72	36	72	450.8
GT80158-P3010	30	0	156.4	GT80158-P4810-S60	48	60	450.8

Note: N channels 10A rings parallel can be used as 1 channel N*10A current. For example: 2 rings 10A parallel could be used as 1 wires 20A. 10A,5A (signal) can combine freely in any way.It can be customized based on standard slip ring,please contact customer service for more detmails.

Specifications

Electrical Data		
Parameter	Value	
	Power	Signal
Rated Voltage	0~690VAC/VDC	0~440VAC/VDC
Insulation Resistance	≥1000MΩ/500VDC	≥1000MΩ/500VDC
Lead Wires	AWG16#Teflon	AWG22#Teflon
Lead Length	Standard 300mm(adjustable)	
Insulation Strength	1000VAC@50Hz，60s	
Electrical Noise	<0.01Ω	

Mechanical Data	
Parameter	Value
Working Life	100 Million Revs
Rotating Speed	ID<60mm,1800RPM
	60mm<ID<120mm,1200RPM
	ID>120mm,800RPM
Working Temperature	-30℃~80℃
Operating Humidity	0~85% RH
Contact Material	Precious Metal
Housing Material	Aluminium Alloy
Torque	0.1N.m；+0.03N.m/6rings
Protection Grade	IP51

Lead Wires Color Code

Ring	1	2	3	4	5	6	7	8	9	10	11	12
Color	BLK	RED	YEL	GRN	BLU	WHT	BLK	RED	YEL	GRN	BLU	WHT

(6 wires for 1 group color, from 7-12, repeat the same color as 1...6, indicated with number code pipe)

Options For Custom Slip Ring

Note: Below special demands can be customized. According, the delivery date will be extended 3 to 15 days; also the cost will be increased 30% to 50%. Most of our basic parts are standard and modular, which can save the cost and lead time.

① Cable exit way and cable length can be customized for both rotor and stator.
② Because of the structure limitation, length/height/OD can be customized on your request.
③ Support current or signal up to 200 rings.
④ Aviation plug, terminal and heat-shrink tube are optional.
⑤ Hybrid slip ring for Yaskawa/Panasonic/Siemens servo control signal, power line and encoder line.
⑥ Support mixed high speed data transmission (including Ethernet, USB, RS232, RS485, Profibus, CanBUS, CANOPEN, DeviceNET, CC-LINK, ProfiNET, EtherCAT, etc.)
⑦ Can combine temperature control signal with thermocouple signal.
⑧ Special environment can be customized, such as quakeproof, high temperature, etc.
⑨ Hybrid Pneumatic/hydraulic and electric slip ring can be mixed.
⑩ High temperature can up to 500 degrees.
⑪ High pressure can up to 110KV
⑫ Rotating speed can up to 10000RPM
⑬ Maximum current can up to 5000 amperes.
⑭ Military grade
⑮ Optional for underwater IP65, IP68.
⑯ Optional for stainless steel housing
Technical support: technical@moflon.com

GT90185 Series

GT90185 series provides a 90mm through-bore for routing of hydraulic or pneumatic lines or hydraulic or pneumatic rotating shaft installation, and a compact 185mm outside diameter,features long life, fiber brush contact technology for ultimate performance in manychallenging applications.
GT90185 series are standard, off-the-shelf products, Color-coded lead wires are used onboth the stator and rotor for simplified electrical connections.It can transmit signal(2A), 10A, multiple 10A current when 360° degree free rotating.

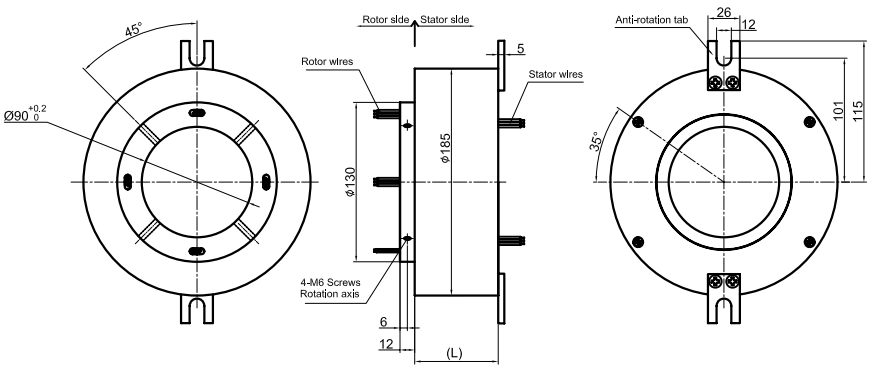

Part# Explanation

GT 90185 - P 06 10- S 06

- GT:through bore slip ring
- 90185:90-ID 90mm;185-OD 185mm
- P:power ring
- 0610:06-6rings;10-rated 10A/ring
- 06:6 rings
- S:signal(5A)

Part# List

GT90185 Series Parts# List							
Part#	10A	Signal or 5A	Length-L (mm)	Part#	10A	Signal or 5A	Length-L (mm)
GT90185-S02	0	2	60	GT90185-S36	0	36	200
GT90185-P0210	2	0	60	GT90185-P0610-S30	6	30	200
GT90185-S03	0	3	64	GT90185-P1210-S24	12	24	200
GT90185-P0310	3	0	64	GT90185-P3610	36	0	200
GT90185-S06	0	6	76	GT90185-S42	0	42	226
GT90185-P0210-S04	2	4	76	GT90185-P0610-S36	6	36	226
GT90185-P0410-S02	4	2	76	GT90185-P1210-S30	12	30	226
GT90185-P0610	6	0	76	GT90185-S48	0	48	250
GT90185-S12	0	12	100	GT90185-P0610-S42	6	42	250
GT90185-P0210-S10	2	10	100	GT90185-P0910-S39	9	39	250
GT90185-P0310-S09	3	9	100	GT90185-P1210-S36	12	36	250
GT90185-P0610-S06	6	6	100	GT90185-P1810-S30	18	30	250
GT90185-P0810-S04	8	4	100	GT90185-P2410-S24	24	24	250
GT90185-P1010-S02	10	2	100	GT90185-S60	0	60	298
GT90185-P1210	12	0	100	GT90185-P0610-S54	6	54	298
GT90185-S18	0	18	124	GT90185-P0910-S51	9	51	298
GT90185-P0210-S16	2	16	124	GT90185-P1210-S48	12	48	298
GT90185-P0410-S14	4	14	124	GT90185-S72	0	72	350
GT90185-P0610-S12	6	12	124	GT90185-P0610-S66	6	66	350
GT90185-P0810-S10	8	10	124	GT90185-P1210-S60	12	60	350
GT90185-P1010-S08	10	8	124	GT90185-P2410-S48	24	48	350
GT90185-P1210-S06	12	6	124	GT90185-P3610-S36	36	36	350
GT90185-P1410-S04	14	4	124	GT90185-S84	0	84	398
GT90185-P1610-S02	16	2	124	GT90185-P1210-S72	12	72	398
GT90185-S24	0	24	148	GT90185-P2410-S60	24	60	398
GT90185-P0410-S20	4	20	148	GT90185-P3610-S48	36	48	398
GT90185-P0610-S18	6	18	148	GT90185-S96	0	96	450
GT90185-P1210-S12	12	12	148	GT90185-P1210-S84	12	84	450
GT90185-P1810-S06	18	6	148	GT90185-P2410-S72	24	72	450
GT90185-P2410	24	0	148	GT90185-P3610-S60	36	60	450
GT90185-S30	0	30	172	GT90185-P4210-S54	42	54	450
GT90185-P0610-S24	6	24	172	GT90185-S108	0	108	498
GT90185-P1210-S18	12	18	172	GT90185-P1210-S96	12	96	498
GT90185-P1810-S12	18	12	172	GT90185-P2410-S84	24	84	498
GT90185-P2410-S06	24	6	172	GT90185-P3610-S72	36	72	498
GT90185-P3010	30	0	172	GT90185-P4810-S60	48	60	498

Note: N channels 10A rings parallel can be used as 1 channel N*10A current. For example: 2 rings 10A parallel could be used as 1 wires 20A. 10A,5A (signal) can combine freely in any way.It can be customized based on standard slip ring,please contact customer service for more detmails.

Specifications

Electrical Data		
Parameter	Value	
	Power	Signal
Rated Voltage	0~690VAC/VDC	0~440VAC/VDC
Insulation Resistance	≥1000MΩ/500VDC	≥1000MΩ/500VDC
Lead Wires	AWG16#Teflon	AWG22#Teflon
Lead Length	Standard 300mm(adjustable)	
Insulation Strength	1000VAC@50Hz，60s	
Electrical Noise	<0.01Ω	

Mechanical Data	
Parameter	Value
Working Life	100 Million Revs
Rotating Speed	ID<60mm,1800RPM
	60mm<ID<120mm,1200RPM
	ID>120mm,800RPM
Working Temperature	-30℃~80℃
Operating Humidity	0~85% RH
Contact Material	Precious Metal
Housing Material	Aluminium Alloy
Torque	0.1N.m；+0.03N.m/6rings
Protection Grade	IP51

Lead Wires Color Code

Ring	1	2	3	4	5	6	7	8	9	10	11	12
Color	BLK	RED	YEL	GRN	BLU	WHT	BLK	RED	YEL	GRN	BLU	WHT

(6 wires for 1 group color, from 7-12, repeat the same color as 1...6, indicated with number code pipe)

Options For Custom Slip Ring

Note: Below special demands can be customized. According, the delivery date will be extended 3 to 15 days; also the cost will be increased 30% to 50%. Most of our basic parts are standard and modular, which can save the cost and lead time.

① Cable exit way and cable length can be customized for both rotor and stator.
② Because of the structure limitation, length/height/OD can be customized on your request.
③ Support current or signal up to 200 rings.
④ Aviation plug, terminal and heat-shrink tube are optional.
⑤ Hybrid slip ring for Yaskawa/Panasonic/Siemens servo control signal, power line and encoder line.
⑥ Support mixed high speed data transmission (including Ethernet, USB, RS232, RS485, Profibus, CanBUS, CANOPEN, DeviceNET, CC-LINK, ProfiNET, EtherCAT, etc.)
⑦ Can combine temperature control signal with thermocouple signal.
⑧ Special environment can be customized, such as quakeproof, high temperature, etc.
⑨ Hybrid Pneumatic/hydraulic and electric slip ring can be mixed.
⑩ High temperature can up to 500 degrees.
⑪ High pressure can up to 110KV
⑫ Rotating speed can up to 10000RPM
⑬ Maximum current can up to 5000 amperes.
⑭ Military grade
⑮ Optional for underwater IP65, IP68.
⑯ Optional for stainless steel housing

Technical support: technical@moflon.com

GT100185 Series

GT100185 series provides a 100mm through-bore for routing of hydraulic or pneumatic lines or hydraulic or pneumatic rotating shaft installation, and a compact 185mm outside diameter,features long life, fiber brush contact technology for ultimate performance in manychallenging applications. GT100185 series are standard, off-the-shelf products, Color-coded lead wires are used onboth the stator and rotor for simplified electrical connections.It can transmit signal(2A), 10A, multiple 10A current when 360° degree free rotating.

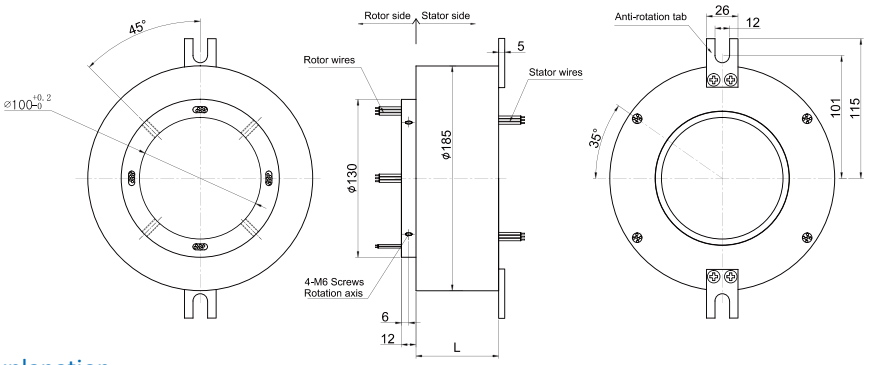

Part# Explanation

GT 100185 - P 06 10- S 06

- GT:through bore slip ring
- 100185:100-ID 100mm;185-OD 185mm
- P:power ring
- 0610:06-6rings;10-rated 10A/ring
- 06:6 rings
- S:signal(5A)

Part# List

GT100185 Series Parts# List							
Part#	10A	Signal or 5A	Length-L (mm)	Part#	10A	Signal or 5A	Length-L (mm)
GT100185-S02	0	2	60	GT100185-S36	0	36	200
GT100185-P0210	2	0	60	GT100185-P0610-S30	6	30	200
GT100185-S03	0	3	64	GT100185-P1210-S24	12	24	200
GT100185-P0310	3	0	64	GT100185-P3610	36	0	200
GT100185-S06	0	6	76	GT100185-S42	0	42	226
GT100185-P0210-S04	2	4	76	GT100185-P0610-S36	6	36	226
GT100185-P0410-S02	4	2	76	GT100185-P1210-S30	12	30	226
GT100185-P0610	6	0	76	GT100185-S48	0	48	250
GT100185-S12	0	12	100	GT100185-P0610-S42	6	42	250
GT100185-P0210-S10	2	10	100	GT100185-P0910-S39	9	39	250
GT100185-P0310-S09	3	9	100	GT100185-P1210-S36	12	36	250
GT100185-P0610-S06	6	6	100	GT100185-P1810-S30	18	30	250
GT100185-P0810-S04	8	4	100	GT100185-P2410-S24	24	24	250
GT100185-P1010-S02	10	2	100	GT100185-S60	0	60	298
GT100185-P1210	12	0	100	GT100185-P0610-S54	6	54	298
GT100185-S18	0	18	124	GT100185-P0910-S51	9	51	298
GT100185-P0210-S16	2	16	124	GT100185-P1210-S48	12	48	298
GT100185-P0410-S14	4	14	124	GT100185-S72	0	72	350
GT100185-P0610-S12	6	12	124	GT100185-P0610-S66	6	66	350
GT100185-P0810-S10	8	10	124	GT100185-P1210-S60	12	60	350
GT100185-P1010-S08	10	8	124	GT100185-P2410-S48	24	48	350
GT100185-P1210-S06	12	6	124	GT100185-P3610-S36	36	36	350
GT100185-P1410-S04	14	4	124	GT100185-S84	0	84	398
GT100185-P1610-S02	16	2	124	GT100185-P1210-S72	12	72	398
GT100185-S24	0	24	148	GT100185-P2410-S60	24	60	398
GT100185-P0410-S20	4	20	148	GT100185-P3610-S48	36	48	398
GT100185-P0610-S18	6	18	148	GT100185-S96	0	96	450
GT100185-P1210-S12	12	12	148	GT100185-P1210-S84	12	84	450
GT100185-P1810-S06	18	6	148	GT100185-P2410-S72	24	72	450
GT100185-P2410	24	0	148	GT100185-P3610-S60	36	60	450
GT100185-S30	0	30	172	GT100185-P4210-S54	42	54	450
GT100185-P0610-S24	6	24	172	GT100185-S108	0	108	498
GT100185-P1210-S18	12	18	172	GT100185-P1210-S96	12	96	498
GT100185-P1810-S12	18	12	172	GT100185-P2410-S84	24	84	498
GT100185-P2410-S06	24	6	172	GT100185-P3610-S72	36	72	498
GT100185-P3010	30	0	172	GT100185-P4810-S60	48	60	498

Note: N channels 10A rings parallel can be used as 1 channel N*10A current. For example: 2 rings 10A parallel could be used as 1 wires 20A. 10A,5A (signal) can combine freely in any way.It can be customized based on standard slip ring,please contact customer service for more detmails.

Specifications

Electrical Data		
Parameter	Value	
	Power	Signal
Rated Voltage	0~690VAC/VDC	0~440VAC/VDC
Insulation Resistance	≥1000MΩ/500VDC	≥1000MΩ/500VDC
Lead Wires	AWG16#Teflon	AWG22#Teflon
Lead Length	Standard 300mm(adjustable)	
Insulation Strength	1000VAC@50Hz , 60s	
Electrical Noise	<0.01Ω	

Mechanical Data	
Parameter	Value
Working Life	100 Million Revs
Rotating Speed	ID<60mm,1800RPM
	60mm<ID<120mm,1200RPM
	ID>120mm,800RPM
Working Temperature	-30℃~80℃
Operating Humidity	0~85% RH
Contact Material	Precious Metal
Housing Material	Aluminium Alloy
Torque	0.1N.m ; +0.03N.m/6rings
Protection Grade	IP51

Lead Wires Color Code

Ring	1	2	3	4	5	6	7	8	9	10	11	12
Color	BLK	RED	YEL	GRN	BLU	WHT	BLK	RED	YEL	GRN	BLU	WHT

(6 wires for 1 group color, from 7-12, repeat the same color as 1...6, indicated with number code pipe)

Options For Custom Slip Ring

Note: Below special demands can be customized. According, the delivery date will be extended 3 to 15 days; also the cost will be increased 30% to 50%. Most of our basic parts are standard and modular, which can save the cost and lead time.

① Cable exit way and cable length can be customized for both rotor and stator.
② Because of the structure limitation, length/height/OD can be customized on your request.
③ Support current or signal up to 200 rings.
④ Aviation plug, terminal and heat-shrink tube are optional.
⑤ Hybrid slip ring for Yaskawa/Panasonic/Siemens servo control signal, power line and encoder line.
⑥ Support mixed high speed data transmission (including Ethernet, USB, RS232, RS485, Profibus, CanBUS, CANOPEN, DeviceNET, CC-LINK, ProfiNET, EtherCAT, etc.)
⑦ Can combine temperature control signal with thermocouple signal.
⑧ Special environment can be customized, such as quakeproof, high temperature, etc.
⑨ Hybrid Pneumatic/hydraulic and electric slip ring can be mixed.
⑩ High temperature can up to 500 degrees.
⑪ High pressure can up to 110KV
⑫ Rotating speed can up to 10000RPM
⑬ Maximum current can up to 5000 amperes.
⑭ Military grade
⑮ Optional for underwater IP65, IP68.
⑯ Optional for stainless steel housing

Technical support: technical@moflon.com